Pacific Northwest
NATIONAL LABORATORY
Proudly Operated by Battelle Since 1965

If occupancy sensing systems work, will they matter?

Impacts of occupancy-driven control for commercial buildings

MICHAEL R. BRAMBLEY, PH.D.

Pacific Northwest National Laboratory

ARPA-E Advanced Occupancy Sensors for Better Buildings Workshop , July 12-13, 2016, Portland, Oregon.

Motivation

- Buildings account for 40% of total U.S. primary energy consumption
- More than 70% of U.S. electricity use is by buildings
- Commercial buildings account for:
  - 18.5% of total U.S. primary energy consumption
  - 47% of U.S. building energy consumption
  - 36% of total U.S. electricity use

Primary Energy

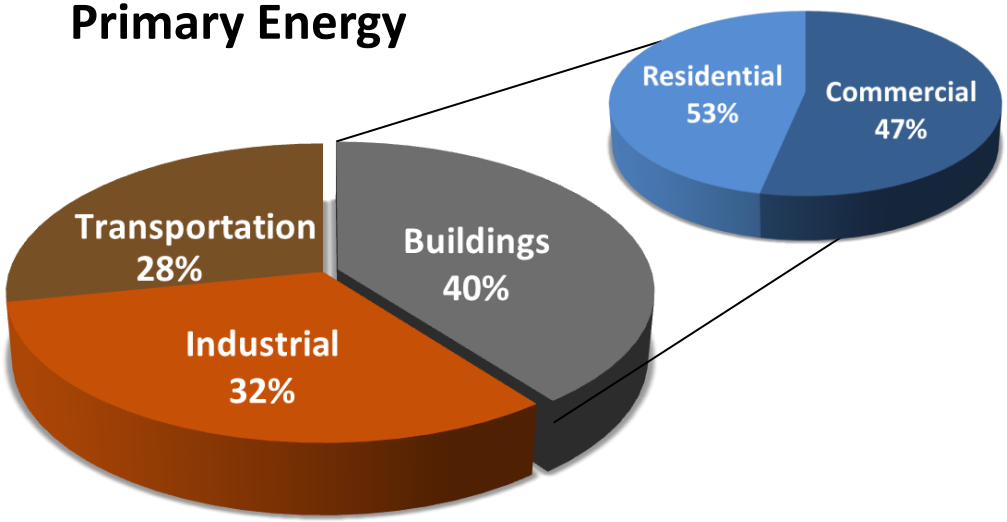

Electricity

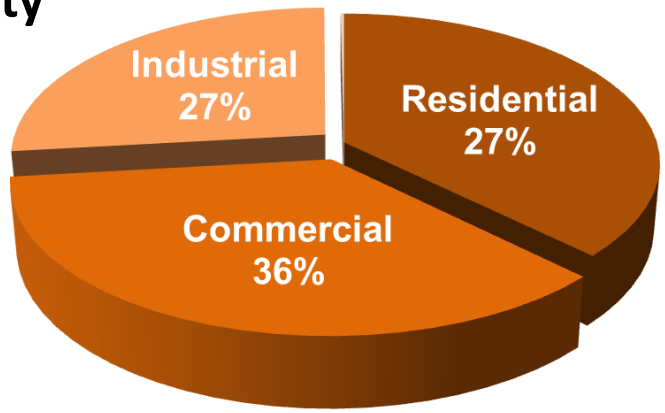

All values are for 2012 and are based on data from the U.S. Energy Information Administration, *Annual Energy Outlook 2014*, Tables A-2 and A-5.

Motivation

- HVAC accounts for 31% of total commercial building primary energy use (2012)
  - 12.1% for heating
  - 9.9% for cooling
  - 9.0% for ventilation
- The fraction of primary HVAC energy represented by ventilation increased from 13.2% in 2003 to 29% in 2012
- HVAC systems maintain ventilation rates for fully occupied zones even when fewer occupants are present

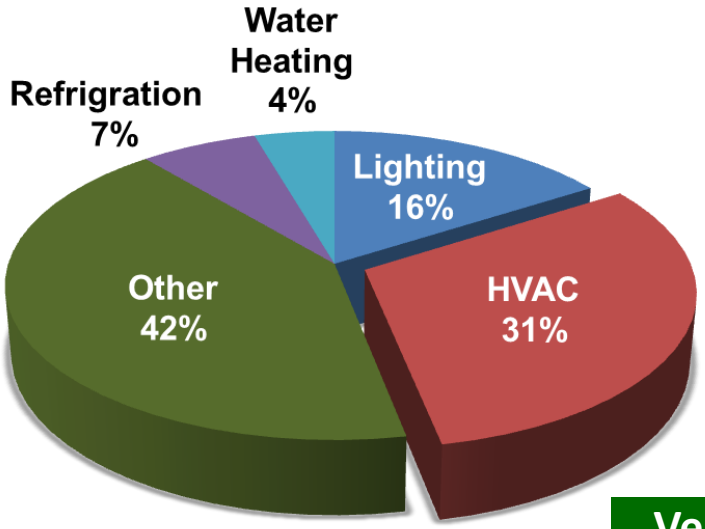

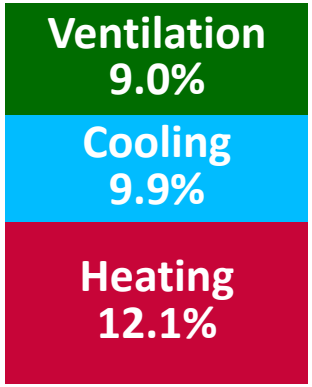

All values are for 2012 (except as indicated) and are based on data from the U.S. Energy Information Administration, *Annual Energy Outlook 2014*, Tables A-2 and A-5 and Annual Energy Review 2005, Table A5.

Occupancy-driven Control (ODC) for Variable-Air-Volume (VAV) Systems

Pacific Northwest NATIONAL LABORATORY
Proudly Operated by Battelle Since 1965

- Modulates control variables for terminal boxes based on measurements of near real-time occupancy
  - Ventilation-only flow rate is based on counted occupancy
  - Air-handler fan speed adjusts automatically
  - Static pressure reset can be used to achieve greater savings
  - Outdoor-air flow rate can be changed for additional savings as the total airflow rate for an air handling unit decreases

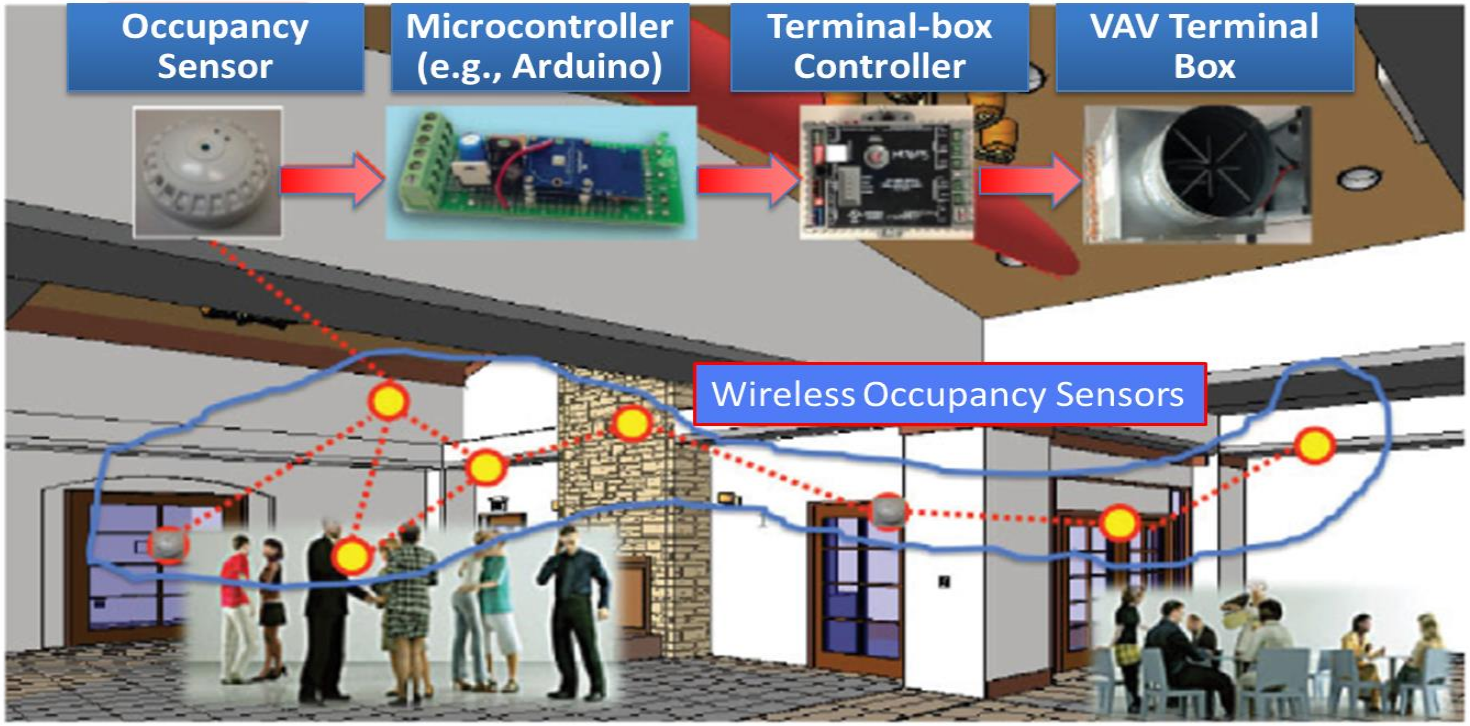

Common Single-Duct VAV System

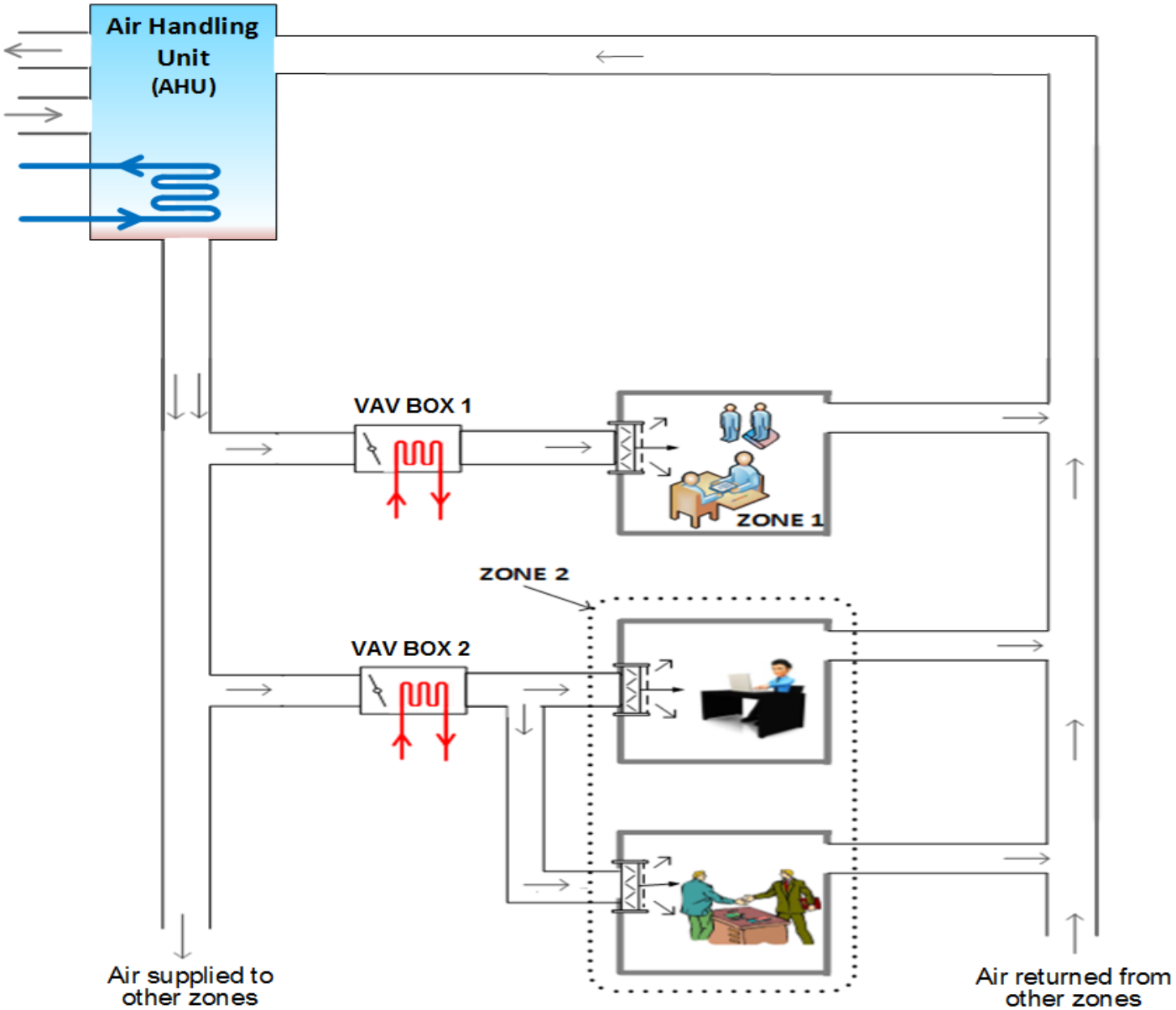

VAV Terminal Box

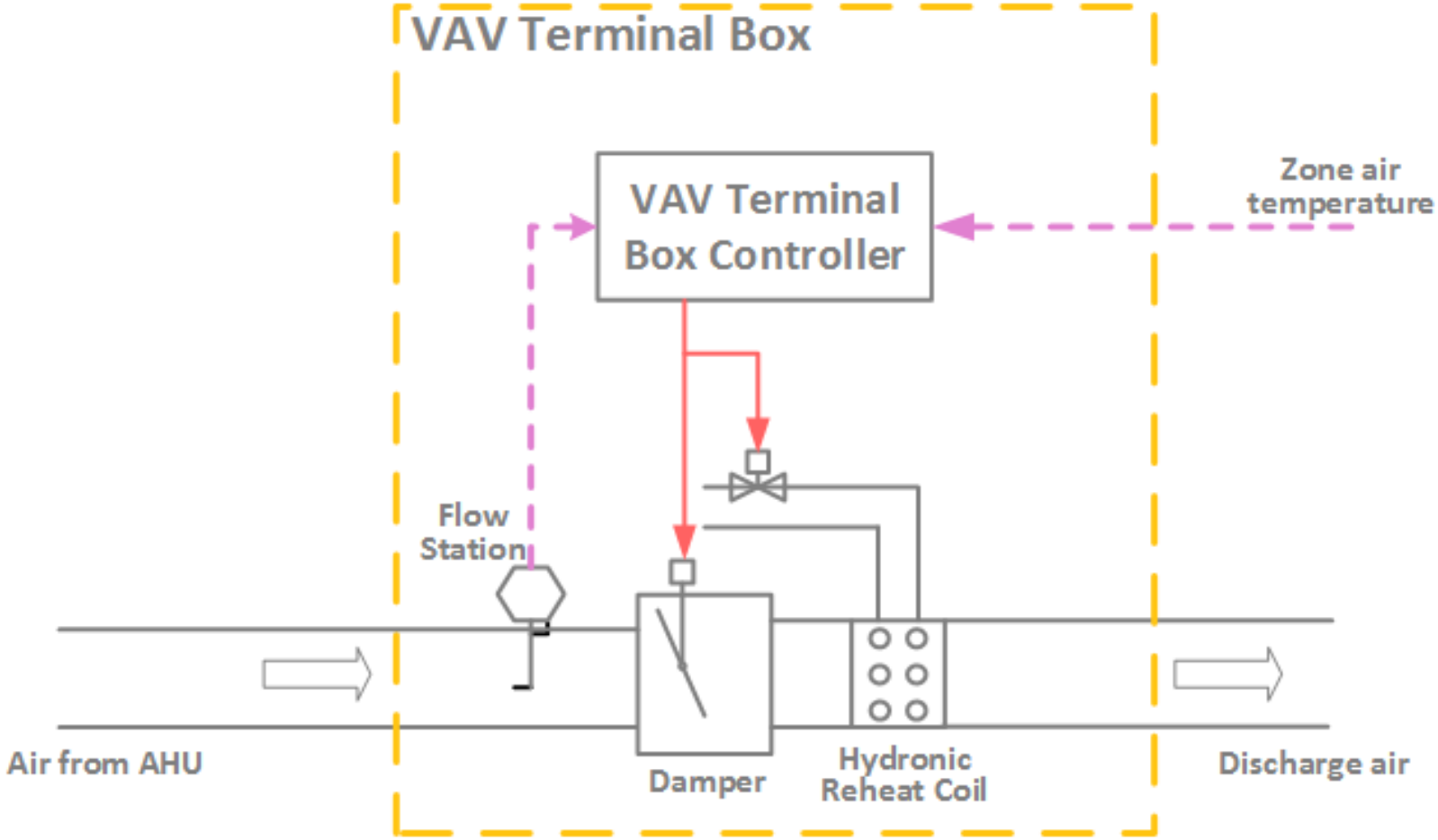

Common Single-Duct VAV System

- Terminal-box control
  - Damper and valve positions controlled to maintain room temperature
  - Ventilation-only flow rate is set to the rate required for fully occupied zone
  - No occupancy measurements

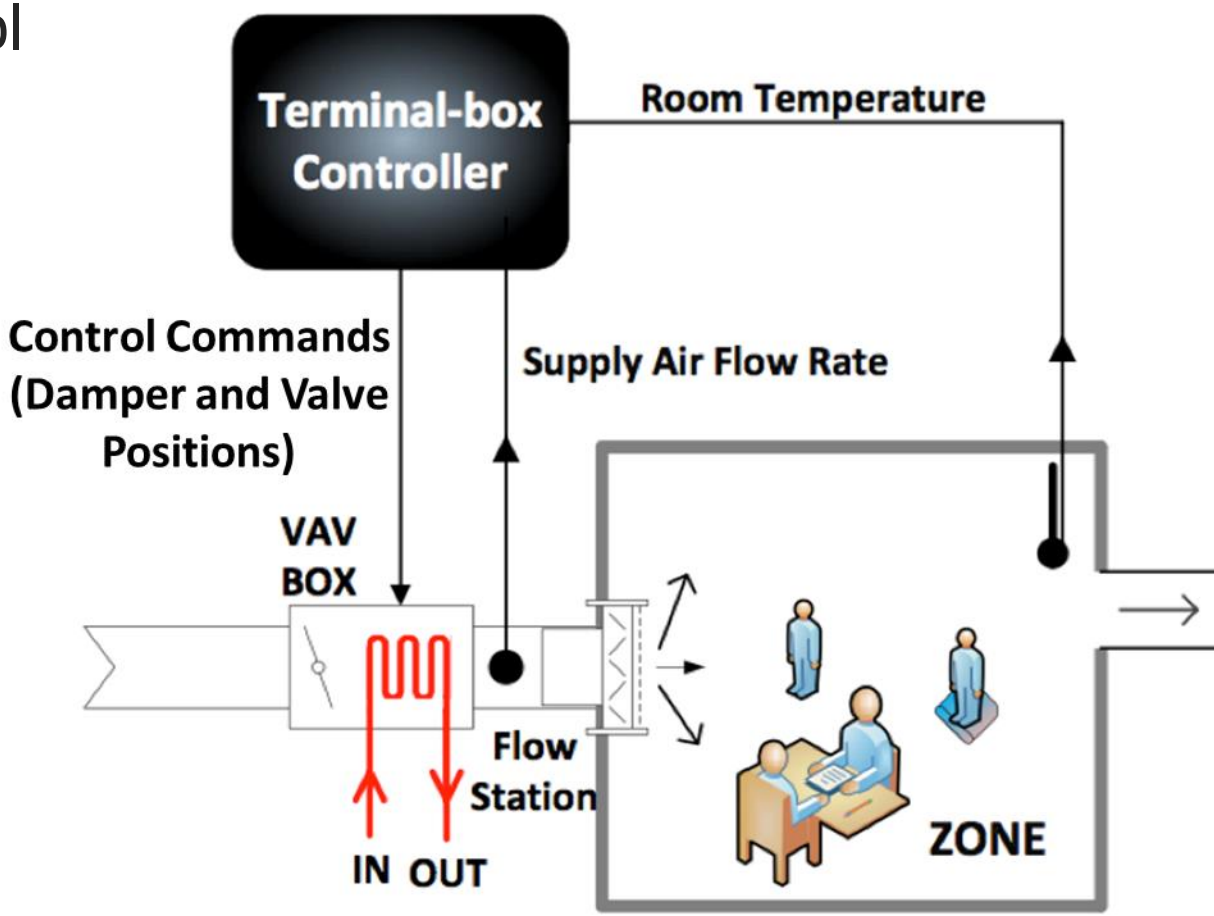

One-Room Zone ODC System

- Modulate the control variables based on number of occupants

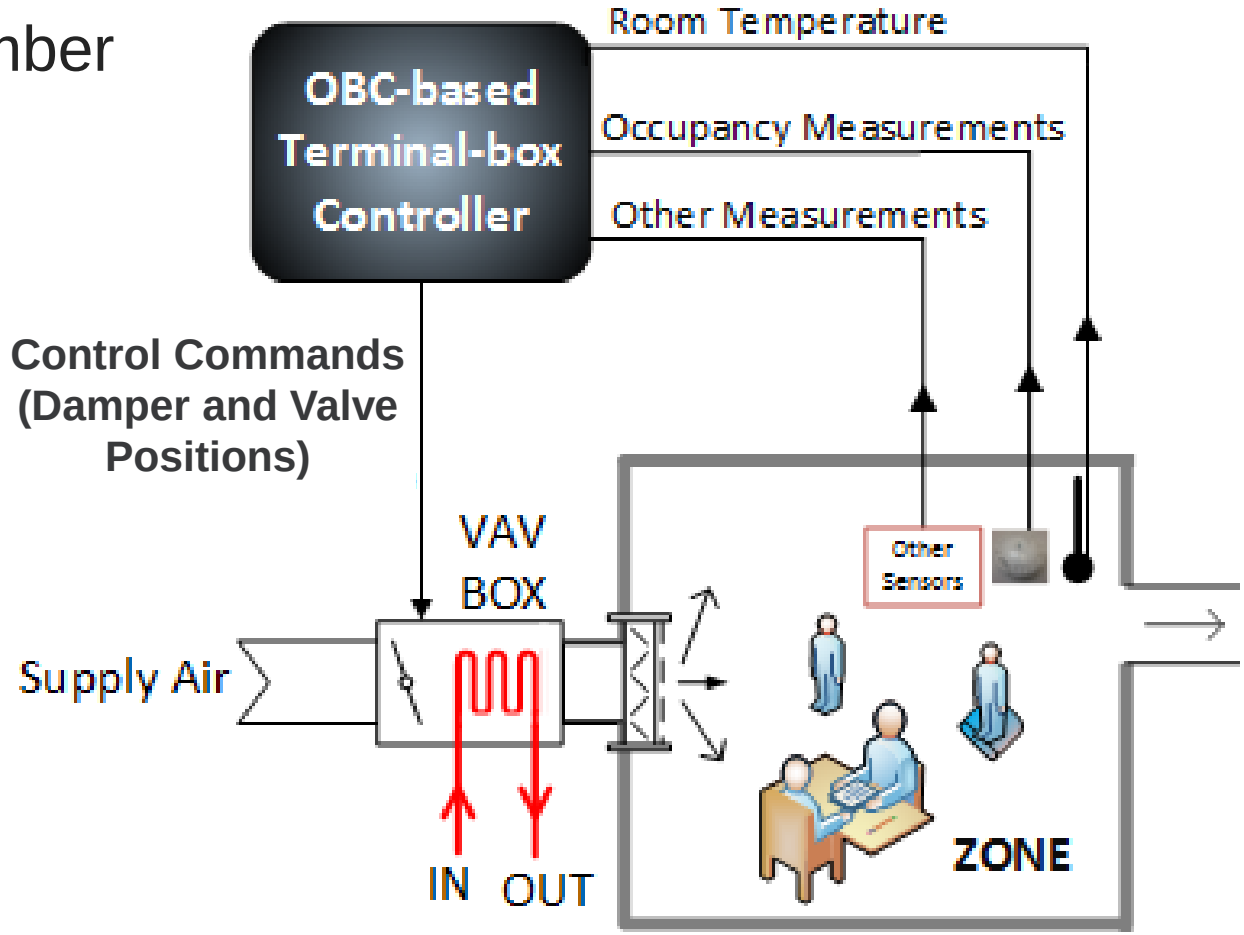

Occupancy-driven Control (ODC)

Pacific Northwest NATIONAL LABORATORY
Proudly Operated by Battelle Since 1965

Category	Controlled Zone	Baseline	Conventional Sensor	Advanced Sensor
Terminal Box Minimum Airflow Rate	Private Offices	30% (constant)	30% (occupied) 0 (unoccupied)	0 when all offices are unoccupied; 30% if any office is occupied
	Open Office Spaces	30% (constant)	30% (occupied) 0 (unoccupied)	Modulated between 0% and 30% based on the number of occupants
	Conference Rooms	50% (constant)	50% (when occupied) 0 (when unoccupied)	Modulated between 0% and 50% based on the number of occupants

Site Energy Savings

- Savings relative to no-ODC case
- Based on EnergyPlus simulations
- 1989 large office buildings upgraded to 2012
- ODC applied only to private offices, open offices, and conference rooms
- Occupancy measurements used to control both terminal box airflow rates during ventilation only and lighting
- Delay times for turning lights off decreased compared to common occupant presence/absence sensors
- Results reported in Zhang J, RG Lutes, G Liu, and MR Brambley. 2013. *Energy Savings for Occupancy-Based Control (OBC) of Variable-Air-Volume (VAV) Systems*. PNNL-22072, Pacific Northwest National Laboratory, Richland, WA. http://www.pnnl.gov/main/publications/external/technical_reports/PNNL-22072.pdf

Site Energy Savings
Large Commercial Building, Advanced Sensor

Pacific Northwest NATIONAL LABORATORY
Proudly Operated by Battelle Since 1965

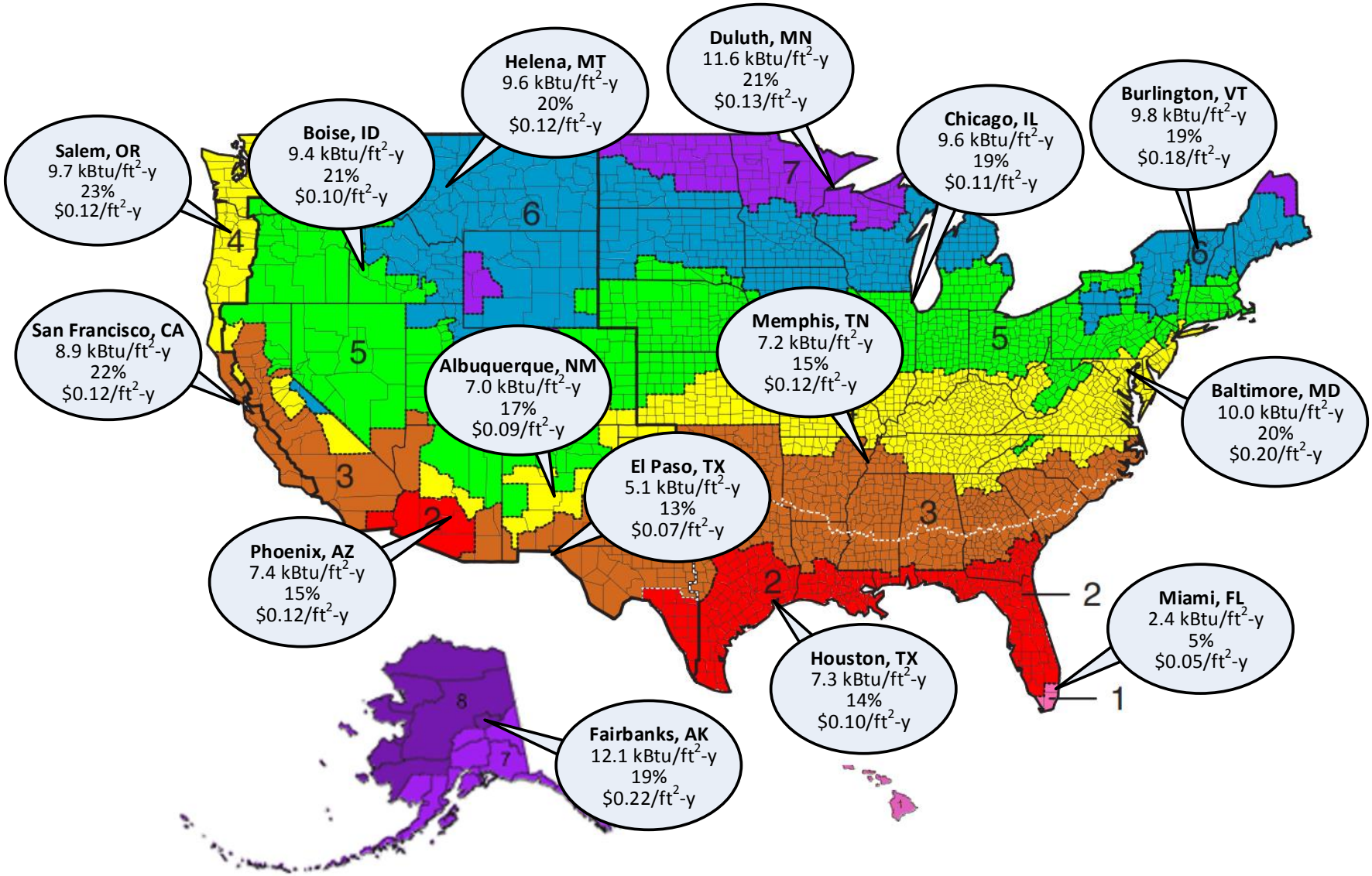

Monetary Savings on Energy
Large Commercial Building, Advanced Sensor

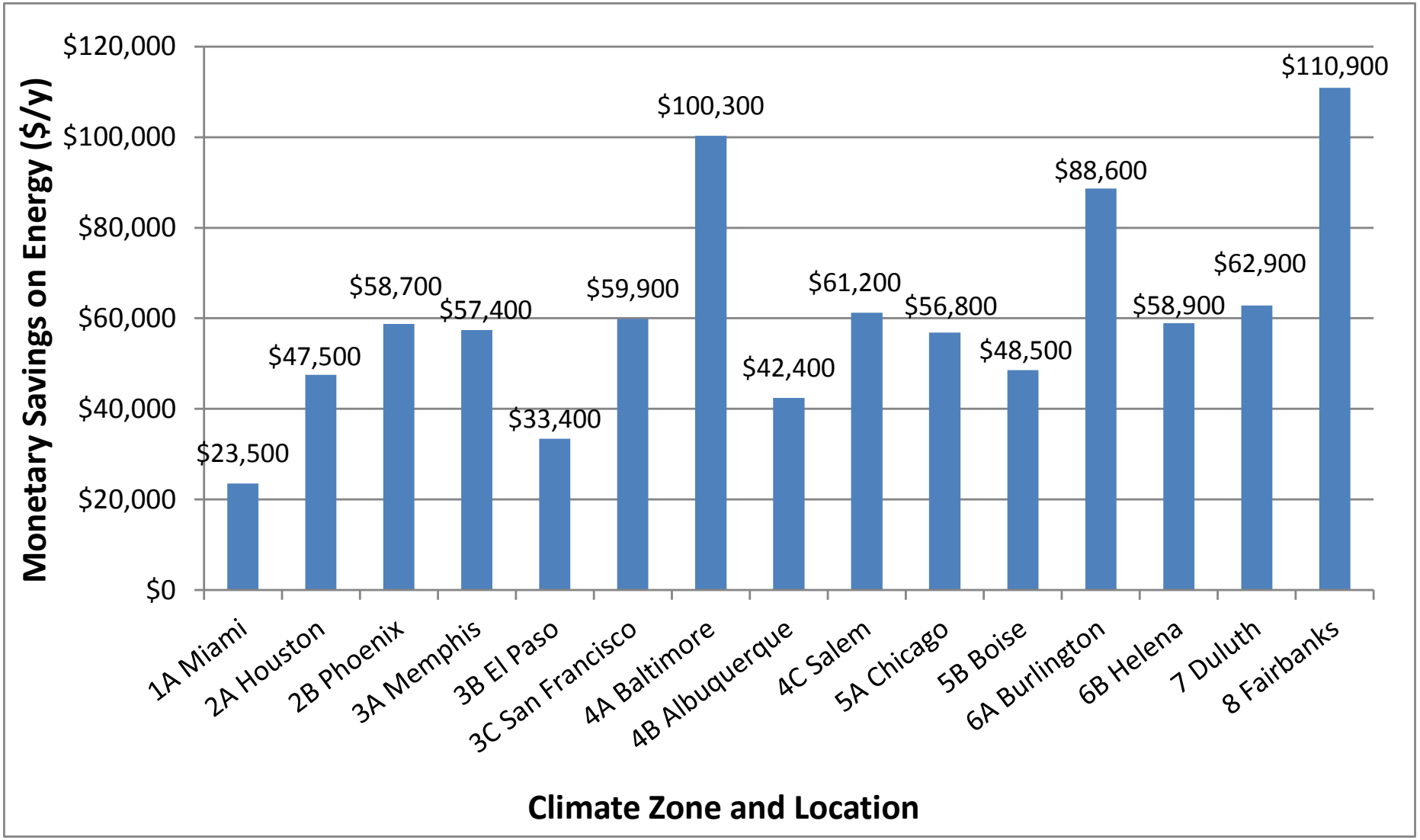

Additional Information and Conclusions

Pacific Northwest NATIONAL LABORATORY
Proudly Operated by Battelle Since 1965

- Significant potential to reduce energy usage (18% average across U.S. climate zones)
- HVAC energy savings/Lighting energy savings ≈ 8
- Retrofitable on existing VAV systems
- Implementable on controls for both stand-alone and networked terminal boxes
- Current commercial sensors are expensive
- Total installed cost potentially low enough to yield payback periods of 3 years or less in targeted climates for incremental cost of $200 to $300

Present Work

- Impact of assumptions in previous analysis
- Improved model for occupancy
- Impacts for other building types
- Sensitivity to sensing uncertainty (inaccuracy in occupancy sensing)
- Maximum cost of ODC system, including occupancy sensing, to achieve a specific payback period (e.g., 3 years)

Thank you!

Questions?

michael.brambley@pnnl.gov