Ratson Morad, Matt Orosz, Cogenra Solar
Double FOCUS hybrid solar energy system

What is the technology?

- *Cogenra Solar is developing a hybrid CPV-CSP solar converter with a specialized light-filtering mirror that splits sunlight by wavelength, allowing part of the sunlight spectrum to be converted directly to electricity with photovoltaics (PV), while the rest is captured and stored as heat for dispatchable thermodynamic conversion in a heat engine.*

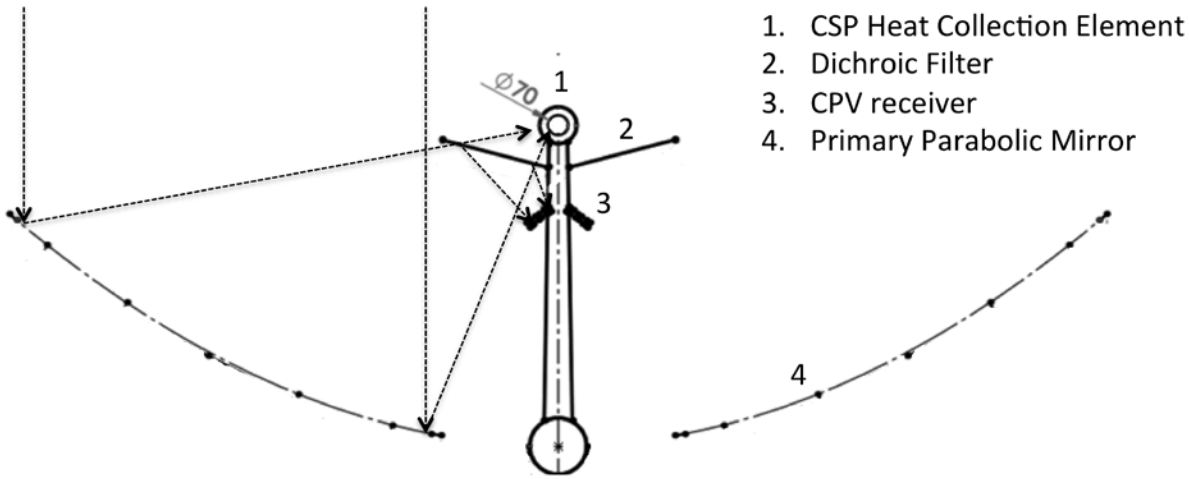

Cross section of the optical arrangement for spectrum splitting CPV-CSP using standard LS-3 type mirrors and a dichroic filter interposed between the primary mirror and the CSP HCE

Ratson Morad, Matt Orosz, Cogenra Solar
Double FOCUS hybrid solar energy system

How does it improve the state-of-the-art?

- Conventional CSP systems make use of the entire solar spectrum at efficiencies limited by the combined losses of their heat collection element (HCE) and the Carnot conversion efficiency of their power block. Single junction PV has a spectral dependence on the band gap E_g, with thermal losses of below E_g wavelenths and thermalization above E_g photons. Negative PV temperature coefficients disscourage recovery of this heat at high temperatures, but physically separating the solar spectrum at the band gap enables the use of a standard high temperature CSP HCE and dual heat engines for high temperature CSP and medium temperature (200°C) CPVT outputs. As an added bonus, this approach could have applications as a retrofit option for boosting the output of currently operating CSP plants by up to 20%. Substantial innovation is required to realize this potential:

- *Commercially available PV cells are not built to survive above 150C –economical, low temp co cells with appropriate E_g must be identified, metallization customized, and high temperature materials used to encapsulate and connect cells and modules.*
- *Precise spectral coatings on large optical substrates can be expensive, at scale in line tooling for dichroic filter components may be needed to drive down costs.*