Kathryn Huff, University of Illinois

Enabling Load Following Capability in the TAP MSR

Team members

Kathryn Huff

Caleb Brooks

Brent Heuser

Tomasz Kozlowski

James Stubbins

Students: Andrei Rykhlevskii, Alvin Lee, Jiaqi Chen, and Longcong Wang
Postdoctoral Scholar: Zhen Li

The research team has collective expertise in **scientific software development**, advanced **fuel cycle systems analysis**, **reactor analysis, two-phase flow**, and **materials experiments.**

Kathryn Huff, University of Illinois

Enabling Load Following Capability in the TAP MSR

Goal

- *This work will design a fuel processing system that enables liquid-fueled MSRs to load follow.*
- *The TransAtomic Power (TAP) MSR will serve as a prototype.*

What is the technology?

We will develop:

- *A novel fuel processing system*
- *for liquid-fueled MSRs*
- *enabling load following.*

Informed by modeling and simulation of multiple physics:

- *fluid dynamics,*
- *neutronics,*
- *and fuel cycle dynamics.*

Fission product removal experiments will fill data gaps.

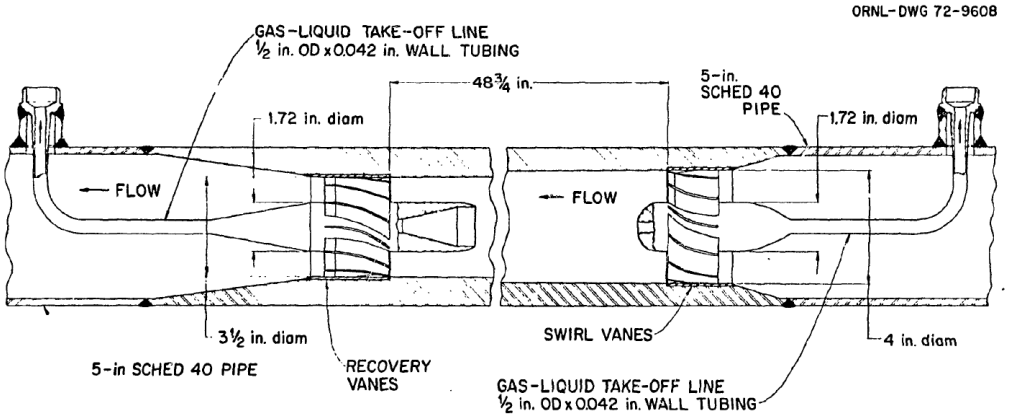

Figure: Axial flow centrifugal gas bubble separator proposed by Gabbard [15].

[15] C. H. Gabbard. Development of an Axial-Flow Centrifugal Gas Bubble Separator for Use in Msr Xenon Removal System. Technical Report ORNL- TM–4533, Oak Ridge National Lab., Tenn. (USA), March 1974.

Kathryn Huff, University of Illinois

Enabling Load Following Capability in the TAP MSR

How is your system transformational?

- *In a rapidly changing domestic energy market, increased penetration of variable generation (e.g. wind and solar) means that innovative nuclear power designs may only be cost-competitive with load-following operation.*
- *If neutron absorbing fission products such as xenon can be removed from the fuel, liquid-fueled MSRs can theoretically reach ramp rates and load follow capacities comparable to peaking natural gas generators*
- *Target: Enable power ramping ±10% of 1250MWe capacity per minute.*
- *Stretch Target: 20%*

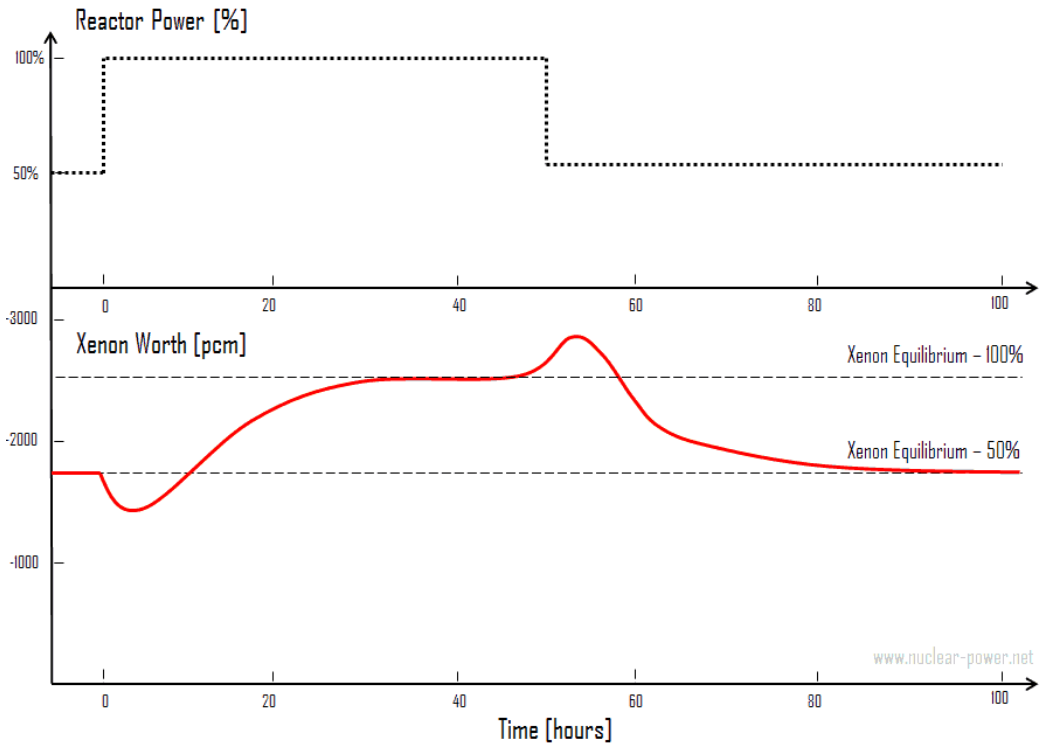

Figure: The key reason that solid fueled nuclear reactors don't ramp up and down is parasitic 135Xe. (Image source: nuclear-power.net). This project will enalbe load following in MSRs by establishing a xenon removal component design.

Kathryn Huff, University of Illinois

Enabling Load Following Capability in the TAP MSR

What challenges do you anticipate?

- *Known Challenges:*
  - *Variability in reported thermophysical salt properties, will be mitigated through sensitivity analyses.*
  - *Limited local salt handling experience will be mitigated by direct engagement with the resource team.*
- *Research development thrusts:*
  - *CFD system simulation*
  - *Fuel Cycle system simulation*
  - *Neutronics load following analysis*
  - *Experimental xenon removal from FLiNaK*
- *Topics of Interest for Engagement*
  - *Salt handling experience*

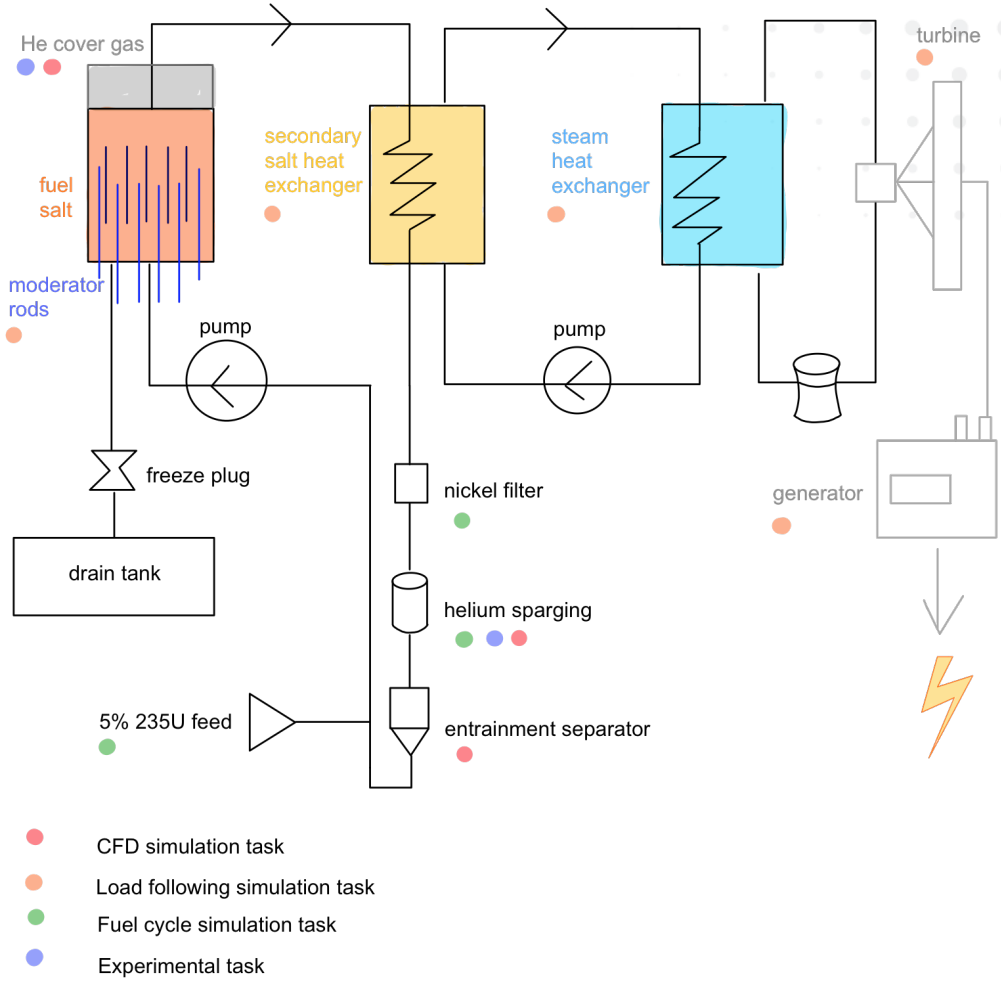

Kathryn Huff, University of Illinois

Enabling Load Following Capability in the TAP MSR

CFD Task, Co-PI Prof. Caleb Brooks

A thorough assessment of two-phase Eulerian-Eulerian constitutive models will be performed to determine their applicability in a MS-He flow with fission product species.

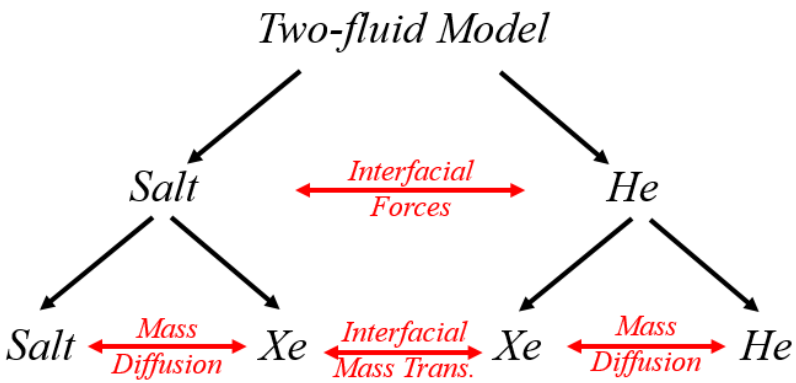

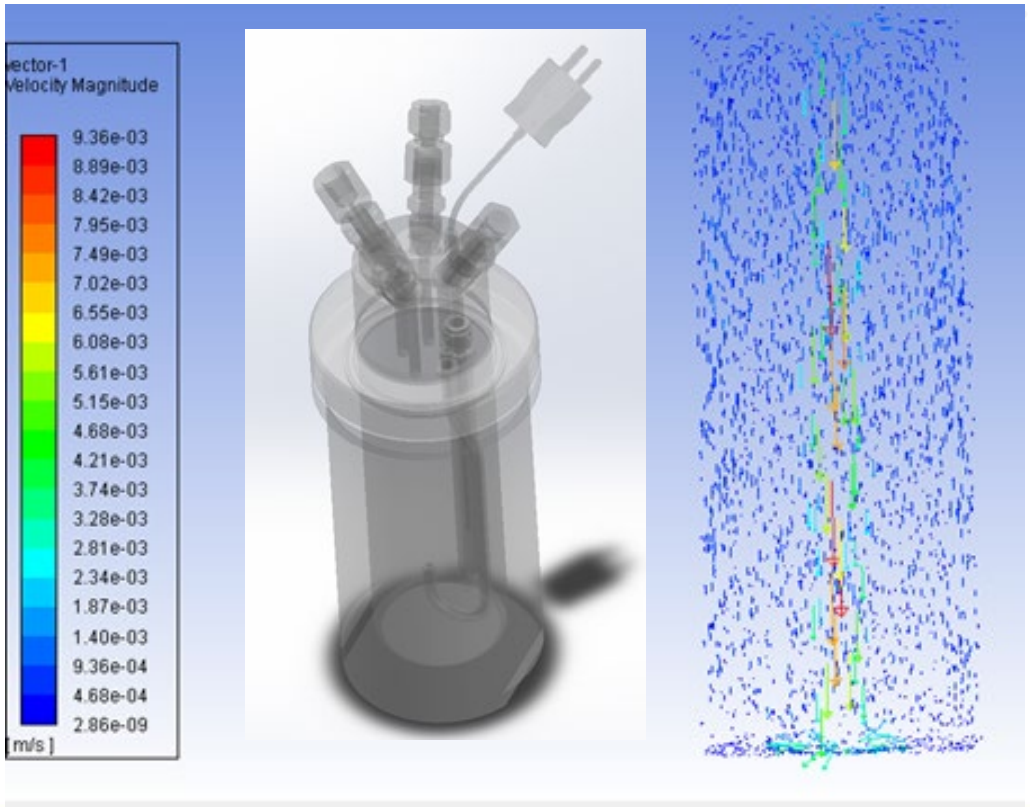

Kathryn Huff, University of Illinois

Enabling Load Following Capability in the TAP MSR

Fuel Cycle Task

Produce a Python toolkit to realistically capture the dynamics of molten salt fuel composition changes during reactor operation with an online gas removal system. Include detailed removal systems to remove challenging fission and decay products such as 135Xe, strategically manage concentrations of fuel isotopes, track delayed neutron precursors, and leverage thermal feedbacks.

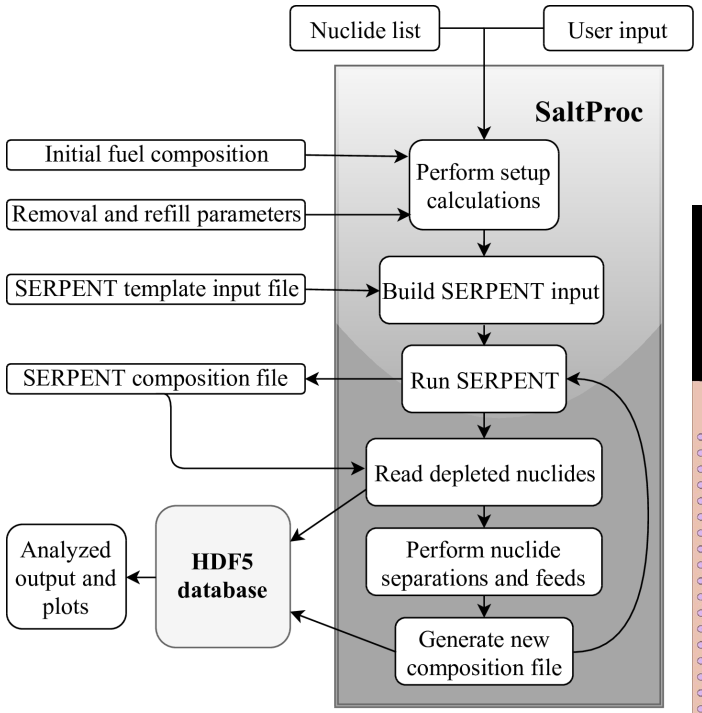

Figure 1: Base case moderator rod configuration and corresponding SERPENT fission and scattering results (from [1]).

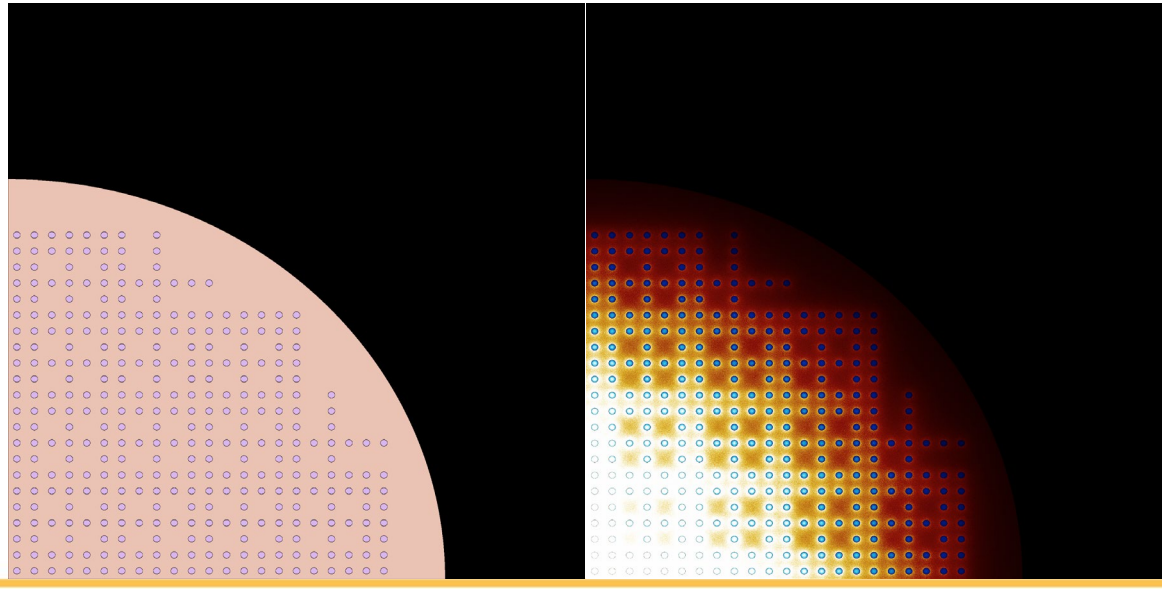

[1] Chaube, A. and Huff, K. D. "Arfc/Tap-Msr: First Release" (2018): doi:10.5281/zenodo.1450733, Available at https://zenodo.org/record/1450733#.W7vA8BNKi3A

Kathryn Huff, University of Illinois

Enabling Load Following Capability in the TAP MSR

Fuel Cycle Task

Produce a Python toolkit to realistically capture the dynamics of molten salt fuel composition changes during reactor operation with an online gas removal system. Include detailed removal systems to remove challenging fission and decay products such as 135Xe, strategically manage concentrations of fuel isotopes, track delayed neutron precursors, and leverage thermal feedbacks.

Figure: (left) The flux-normalized breeding ratio calculated by Serpent2 in a full core simulation of the MSBR is essential for coupling neutronics with SaltProc. (right) This coupling gives the evolution of keff in the core, among other details. Figures replicated from [2].

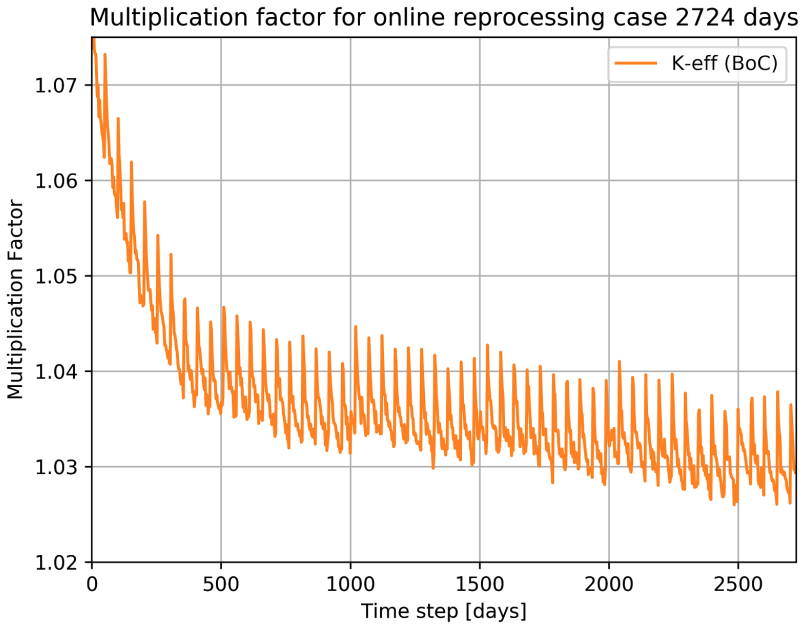

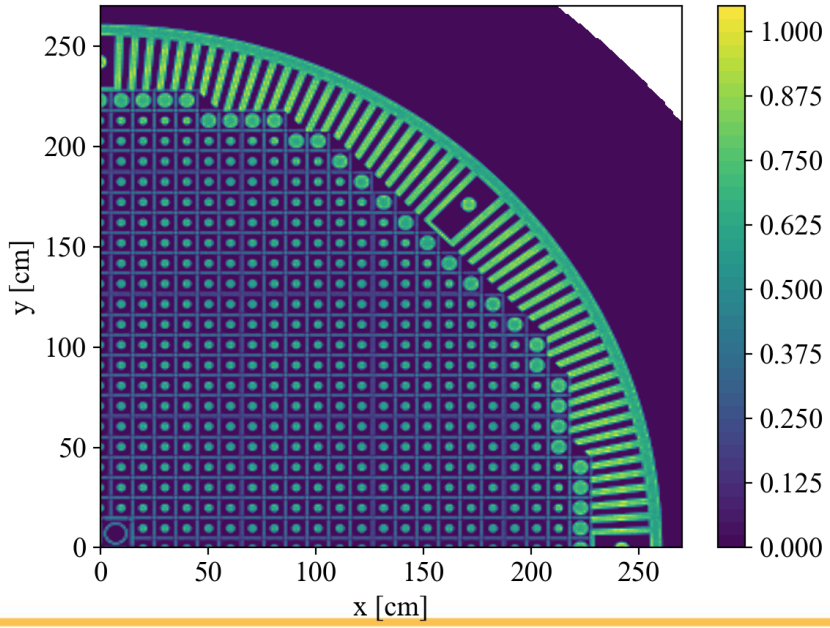

[2] Rykhlevskii, A., Bae, J. W., & Huff, K. (2018). Modeling and Simulation of Online Reprocessing in the Molten Salt Breeder Reactor. Submitted.

Kathryn Huff, University of Illinois

Enabling Load Following Capability in the TAP MSR

Load Following Neutronics Task, Co-PI Prof. Tomasz Kozlowski

Controlled load follow transients are the focus of this work. To properly analyze these transients, many operating conditions will need to be assessed in steady state while transitions between these states will need to be assessed dynamically.

Parameter	Range	Notes
Power	0-1250 MWth	CZP-HFP
Salt Composition	BOL - Equilibrium (various)	via Task 2
Ramp Rate	0% - 20% of 1250 MWth/minute	Goal: safely ramp at 10% Stretch goal: 20%
Ramp Frequency	Goal: 0.1 HFP/min.	Simulate to failure (i.e. 0.2 HFP/min)
Bubble volume fraction	10^{-6} - 10^{-2} [bubble/total]	Informed by Tasks 1 and 4
Moderator rod configurations	As in [1] and [3]	Baseline assumes static moderator rod configuration.
Control rod positions	25 control rod positions, zero to full power.	As needed to simulate control during ramping transients.

[3] Robertson, S., Dewan, L., Massie, M., Davidson, E. E., Betzler, B. R., Worrall, A., & Powers, J. J. (2017). Assessment of the Neutronic and Fuel Cycle Performance of the Transatomic Power Molten Salt Reactor Design (No. ORNL/TM-2017/475 CRADA/NFE-16-06345). Oak Ridge National Lab.(ORNL), Oak Ridge, TN (United States).

Kathryn Huff, University of Illinois

Enabling Load Following Capability in the TAP MSR

FLiNaK Experimental Task, Profs. Brent Heuser, James Stubbins, and Caleb Brooks

Use gas sparging to introduce known concentrations of Xe in solution in FLiNaK molten salt.
All equipment for this process has been purchased
FLiNaK is being provided by the Resource Team, currently via the team at ANL.

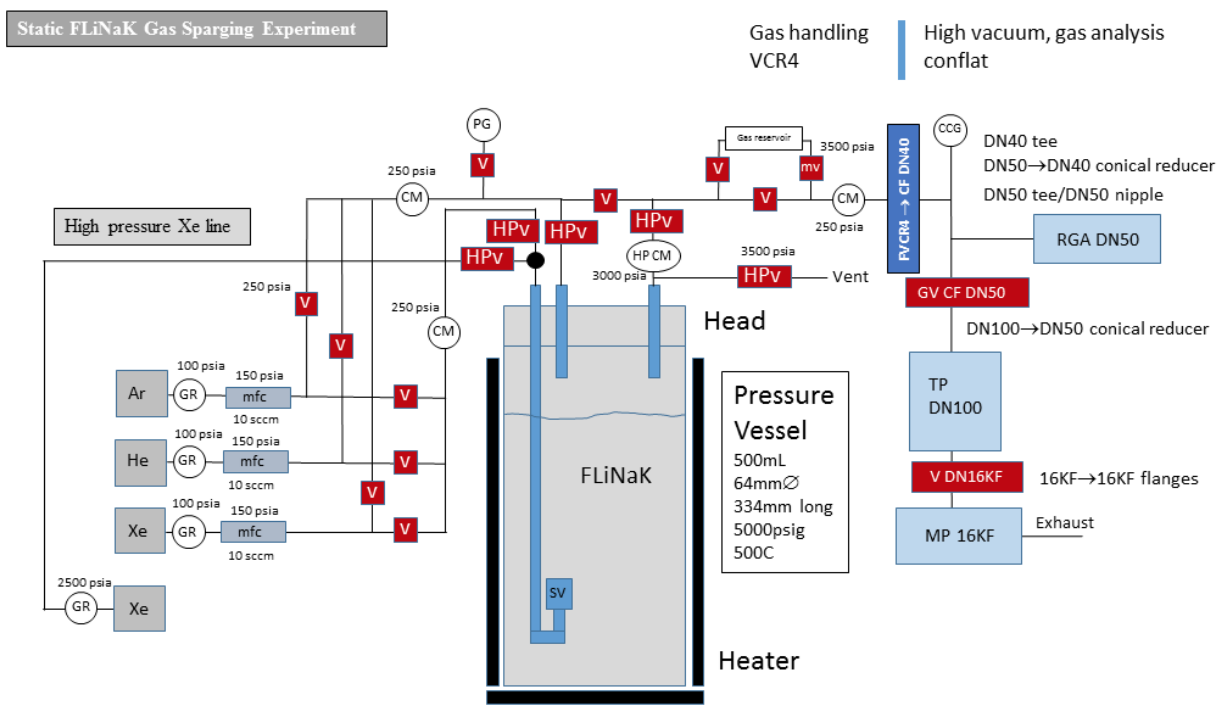

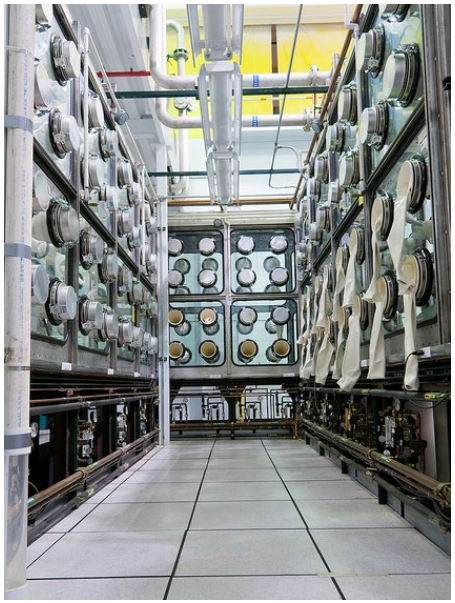

ANL Thermo-Physics Property Lab glove boxes A, B, and C. These are argon-flooded for salt handling (<10ppm oxygen, <0.5ppm water). Source: Flickr, Argonne National Lab

Kathryn Huff, University of Illinois

Enabling Load Following Capability in the TAP MSR

FLiNaK Experimental Task, Profs. Brent Heuser, James Stubbins, and Caleb Brooks

Uses calibrated 200-amu RGA to measure absolute concentrations of He, Ar, and Xe based on total species inventory to:

- *Determine solubility of Xe in FLiNaK vs. T/P.*
- *Determine Xe sparging capability of He and Ar.*

Gas delivery manifold

Pressure vessel

HV side

RGA