Technology Advances in Power Electronics via WBG Converter Circuits

Opportunities and Metrics

R. Erickson and D. Maksimovic

Colorado Power Electronics Center
Department of Electrical, Computer, and Energy Engineering
University of Colorado **Boulder**

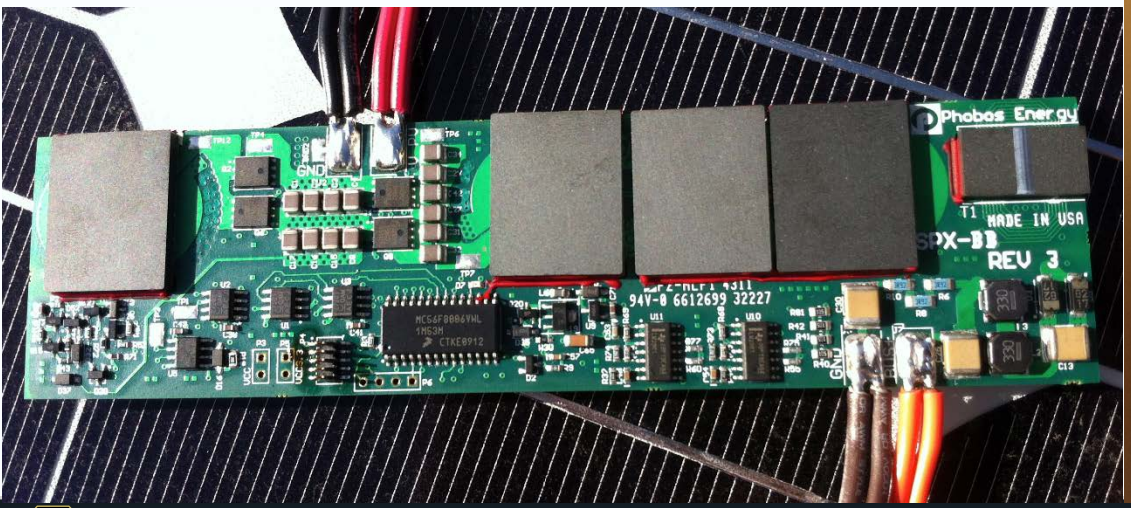

Advancing power converter technology

With new wide bandgap power semiconductor device technologies, there are new opportunities for disruptive and transformative advances in power electronics.

Areas ripe for focus include:

- Converter circuit topologies and architectures
- Resonant and soft switching techniques
- Control techniques
- System architectures and system design
- Enabling complex power circuits and their performance improvements via recent advances in packaging and interconnect technologies

New approaches that combine advances in multiple sources are more likely to lead to transformative results

Brute-force replacement of Si devices with WBG devices offers limited improvement in converter metrics

Key metrics: cost, application-specific loss, size and weight.

Historical Disruptions in Power Semiconductors

Si BJT to Si MOSFET: 1980's, 10 V to 1000 V

Device		1980	1990
Si BJT	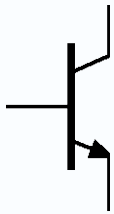	Dominant 20 kHz	Supplanted by MOSFET Still cheaper than MOSFET, but inferior system size and cost
Si MOSFET	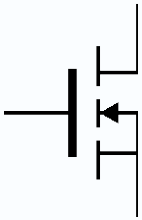	Emerging Too expensive DC losses too large	Dominant 100 kHz Reductions in magnetics size and cost

Why:

1. Reduced ac loss of MOSFETs allowed 5x increase of frequency
2. Availability of good ferrite materials at 100 kHz, so 5x reduction of magnetics size and/or loss

New applications became feasible, new circuit designs were developed, converter systems were optimized in different ways to take advantage

Next Disruption in Power Semiconductors

Si IGBT to SiC MOSFET: 600 V to 10 kV(?)

Device	Now	Ten years (?)
Si IGBT 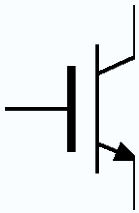	Dominant 10 kHz	Supplanted by SiC MOSFET Still cheaper than SiC, but inferior system size and cost
SiC MOSFET 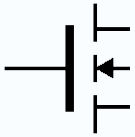	Emerging Too expensive DC losses too large	Dominant 100 kHz Reductions in magnetics size and cost

Why:

1. Reduced ac loss of MOSFETs allowed 5x increase of frequency
2. Availability of good ferrite materials at 100 kHz, so 5x reduction of magnetics size and/or loss

Feasibility of new applications, development of new circuit designs, optimization of converter systems in new ways to take advantage

Power Converter Metrics

Cost

- Generally measured in $/W
- For research projects, other related metrics may be more appropriate:
  - Total semiconductor area, mm^2/kW (Don't just count transistors)
  - Total magnetics core and copper volumes
  - Total capacitor energy or apparent power

Loss

- Efficiency η, or $Q = P_{out}/P_{loss}$
  - Peak efficiency is not very meaningful
  - Weighted loss in realistic scenario: CEC efficiency (solar), CAFE efficiency or *Q* (electric vehicles), etc.
  - Worst-case maximum loss, or *Q* at rated output power

Size

- Volumetric power density, measured in W/in^3 or kW/L
- Gravimetric power density is measured in kW/kg

Metrics are application-specific. Some recent Electric Vehicle metrics:

- DOE vehicle technologies 2020 goals: 13.4 kW/L, 14.1 kW/kg, $3.3/kW
- 2012 Nissan Leaf Si IGBT inverter CAFE average efficiency: 95.6%, *Q* = 25
- 2010 Toyota Prius film capacitor specific energy 9J/kW, specific power 4.6kVA/kW

Efficiency improvement: incremental or transformative?

How significant is a 1% gain in efficiency?

$$\eta = \frac{P_{out}}{P_{in}}$$

$$P_{loss} = P_{in} - P_{out} = P_{out}\left(\frac{1}{\eta} - 1\right)$$

Converters generally are loss-limited, and technologies that can produce large output power while incurring small loss result in small size and low cost.

$$Q = \frac{P_{out}}{P_{loss}} = \frac{\eta}{(1-\eta)}$$

For a given limited Ploss, increasing *Q* increases available output power, and hence also the specific cost ($/W)

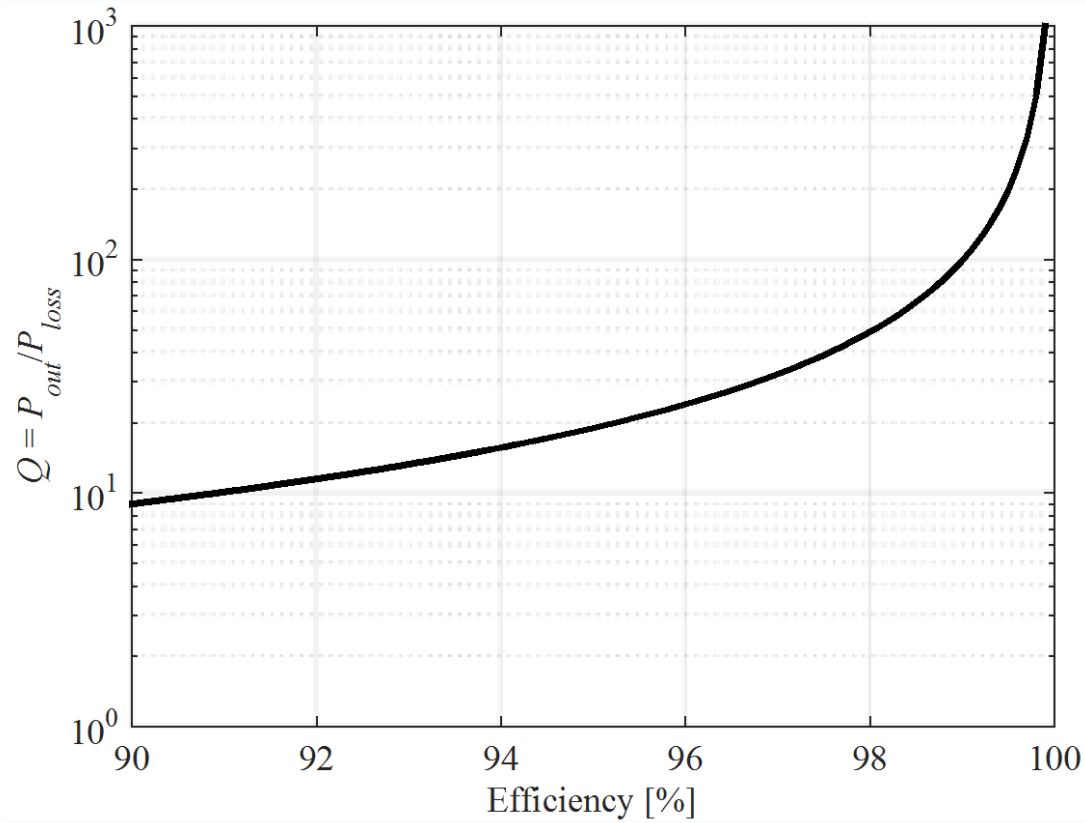

Trends in Converter Circuit Topologies and Control

Complex converter topologies

- Current scaling: multi-phase topologies
- Voltage scaling: multi-level topologies
- Modularity and multilevel modular converters
- Efficient indirect power processing: composite architectures that employ dissimilar modules

These approaches can lead to significant improvements in power density, efficiency, and performance

Enablers for complex converter architectures

- Control techniques including autonomous module control and efficiency maximization via passthrough modes
- Packaging and complex interconnects

Application Example: HEV/PHEV/EV Drivetrain

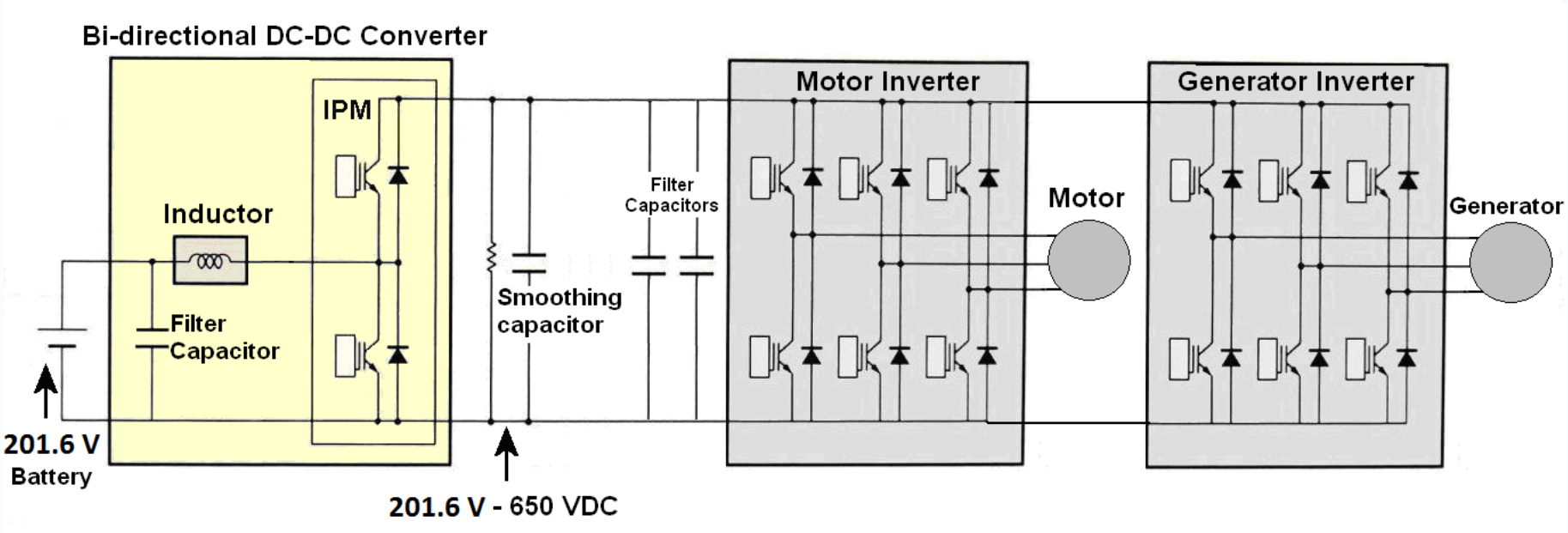

Power electronics architecture of the 2010 Prius and other Toyota hybrids

DC bus dynamically adjusted from V_{batt} up to 650 V (800 V max in transients)

Toyota bidirectional boost dc-dc converter:

- Si IGBTs: 1200 V, 10 kHz.
- > 96% peak efficiency, but only ~93% average efficiency over US06 drive cycle

Power over driving cycles

US 06 standard drive cycle

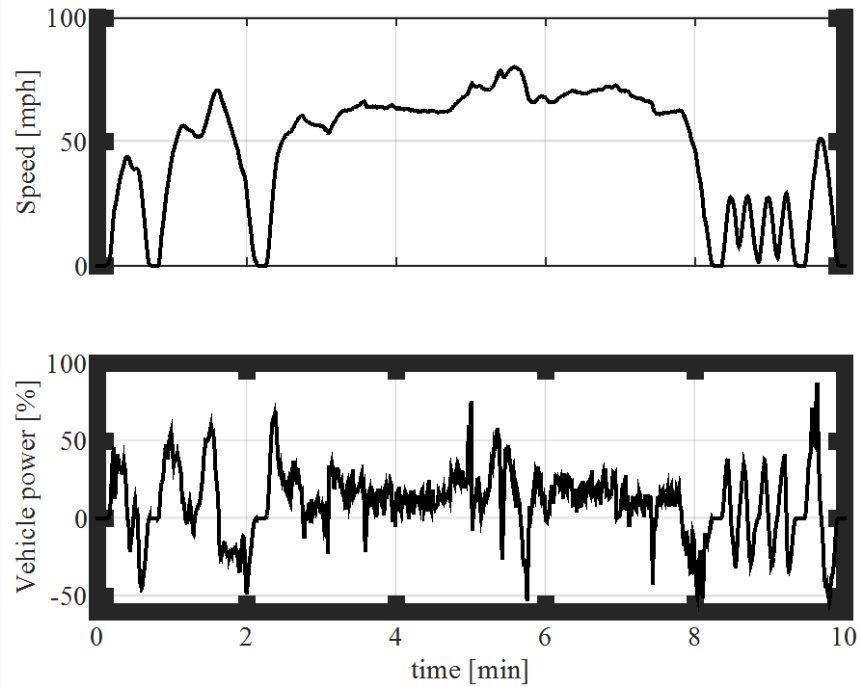

Drive cycle histograms

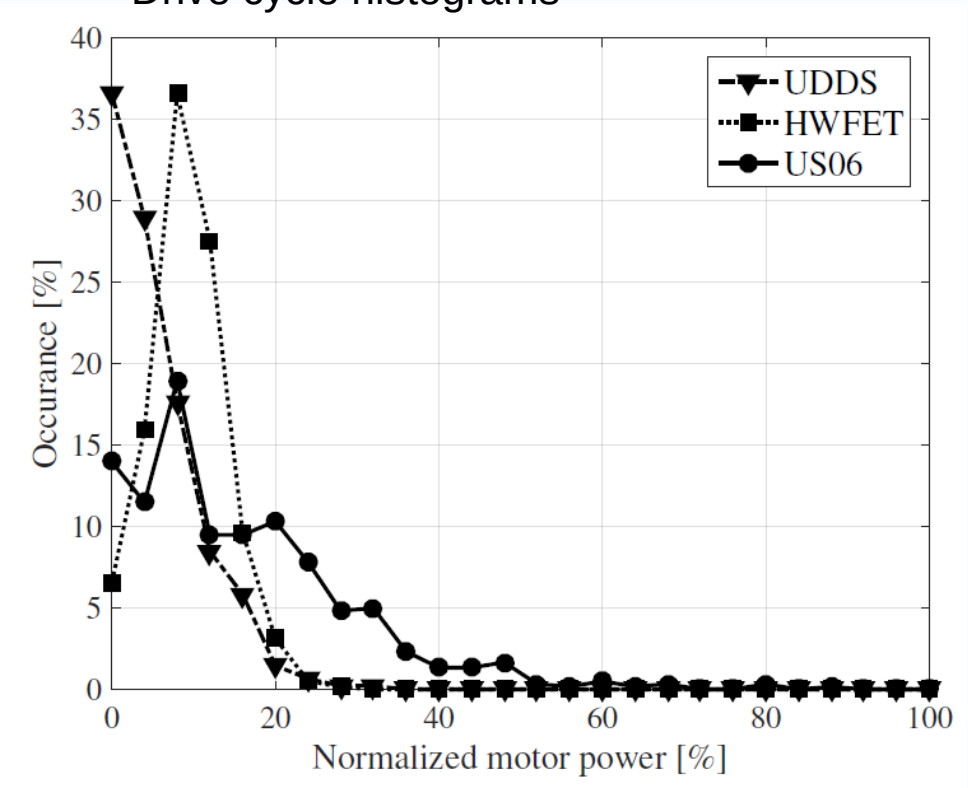

- Peak power is much higher than average power
- Converter power is rarely above 20% of rated power
- Weighted efficiency (or weighted *Q*) is the most important metric:

$$Weighted\ Q = \frac{\int |P_{out}|}{\int P_{loss}}$$

Boost Composite Converter Architecture

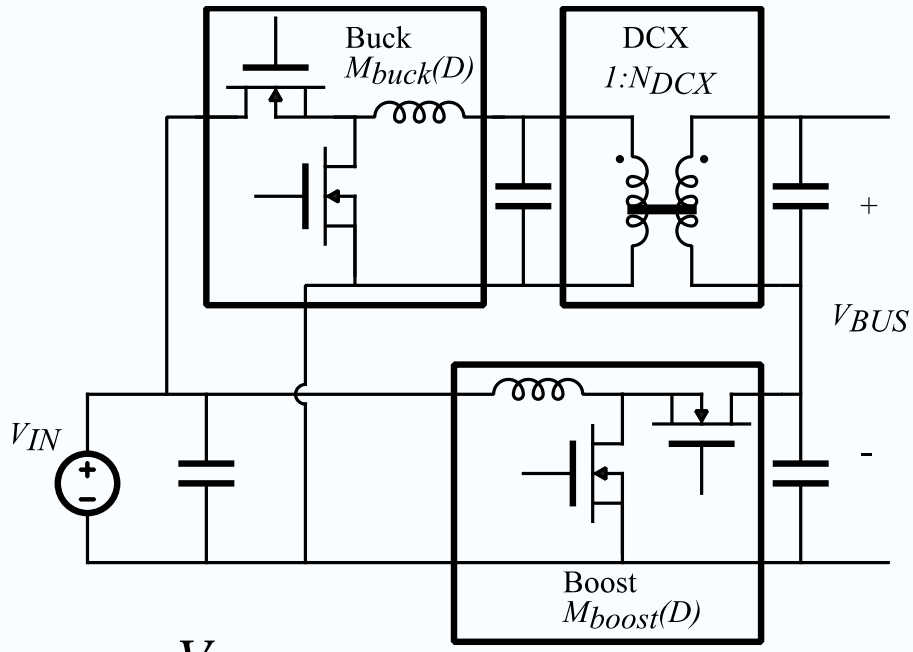

$$M = \frac{V_{out}}{V_{in}} = M_{buck}N_{DCX} + M_{boost}$$

Dissimilar partial-power converter modules:

- Same total silicon area
- Total film capacitor size reduced by 3x
- Significantly lower loss at high boost ratios
- Significantly reduced partial-power loss

Dominant loss mechanisms are addressed:

- Use of pass-through modes to minimize AC losses
- Use of ultra-high-efficiency DC Transformer (DCX) module to convert most of the indirect power

1. H. Chen, K. Sabi, H. Kim, T. Harada, R. Erickson, and D. Maksimovic, "A 98.7% Efficient Composite Converter Architecture with Application-Tailored Efficiency Characteristic," *IEEE Transactions on Power Electronics*, vol. 31, no. 1, pp. 101-110, Jan. 2016.
2. H. Chen, H. Kim, R. Erickson and D. Maksimovic, "Electrified Automotive Powertrain Architecture Using Composite DC-DC Converters," *IEEE Transactions on Power Electronics*, 2016.

Efficiency comparison (250-to-650 V, 15 kW)

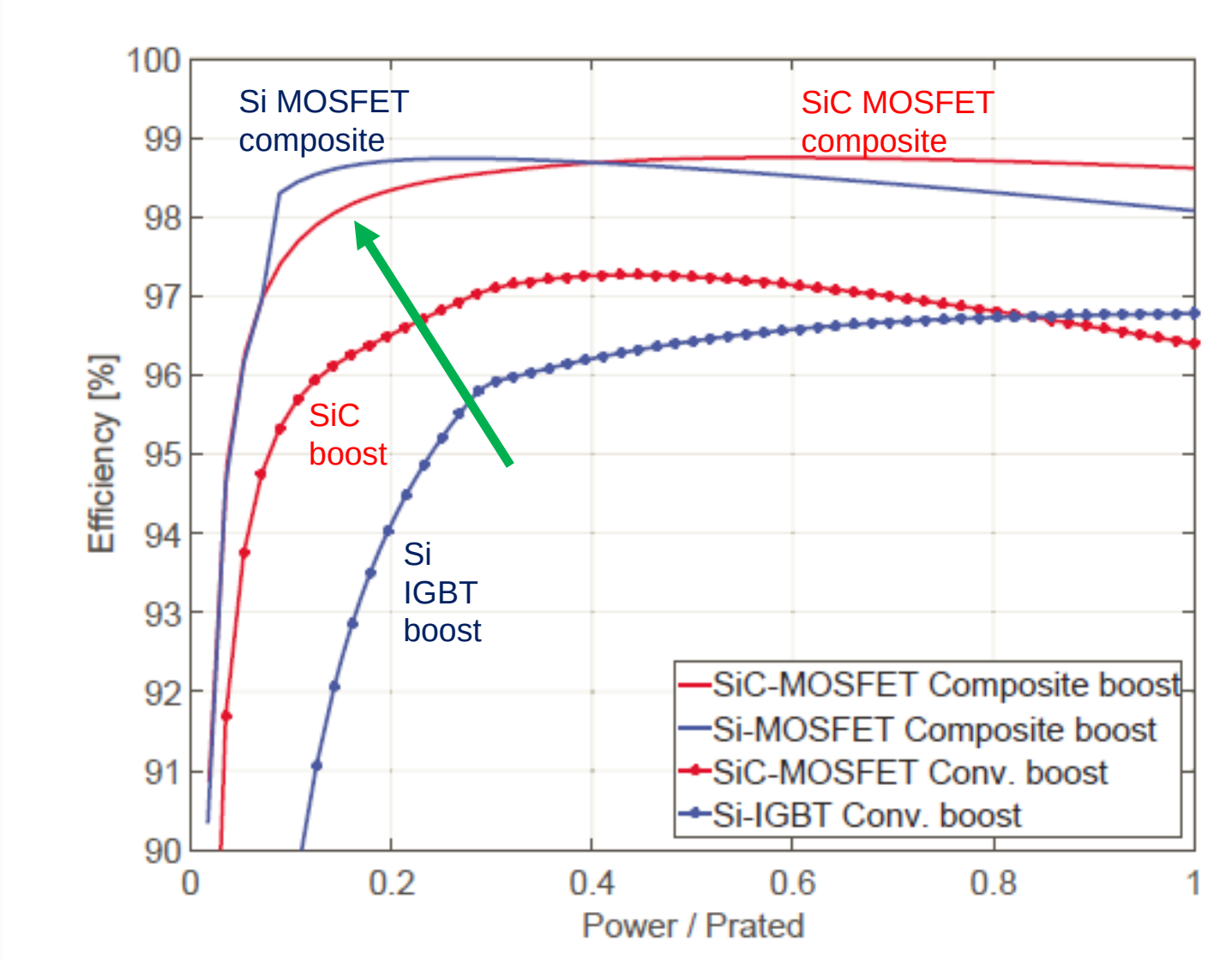

Summary of converter technologies: EV drivetrain boost

Converter	Si-IGBT Conventional boost	Si-MOSFET Composite boost	SiC-MOSFET Conventional boost	SiC-MOSFET Composite boost
Switching frequency	10 kHz	20 kHz	240 kHz	240 kHz
CAFE efficiency	94.3 %	98.2 %	96.9 %	98.3 %
CAFE Q factor	22.2	55.3	34.7	58.6
Magnetic volume [mL]	343	372	136	82

- Brute-force device replacement in the conventional boost converter yields relatively small improvements in efficiency and converter *Q*, and no improvements in capacitor size
- **Composite architecture + SiC devices = transformative improvement**
  - Composite architecture addresses fundamental loss mechanisms
  - SiC enables increased switching frequency and much reduced magnetics size
  - In the composite architecture, SiC yields very high peak and average efficiency, much higher converter *Q*, and very high power density

High Voltage Applications of WBG Devices

Scaling power electronics to medium- or high-voltage via WBG semiconductors

- Take advantage of multi-kV capabilities of SiC
- In modular approaches, find sweet spot for SiC devices to determine module voltage. The superlinear scaling of MOSFET epitaxial resistance with rated voltage suggests that there is an optimum choice

$$R_{on} \sim V^k$$

- Cost of SiC is proportional to semiconductor area, which is determined by its current density:

$$\left(\frac{\$}{W}\right) = \left(\frac{\$}{mm^2}\right)\left(\frac{mm^2}{A}\right)\left(\frac{1}{derated\ voltage}\right)$$

- Need autonomous control of modules

Conclusions

New WBG semiconductor power devices can enable new opportunities for disruptive and transformative advances in power electronics, but new device technologies must be combined with advances in converter circuits and control. Areas ripe for focus include:

- Converter circuit topologies and architectures
- Resonant and soft switching techniques
- Control techniques
- System architectures and system design
- Enablement of more complex power circuits via interconnect and packaging

Brute-force replacement of Si devices with WBG devices offers limited improvement in converter metrics

Suggested ways to measure cost:

- Total semiconductor area, mm^2/kW (Don't just count transistors!)
- Total magnetics core and copper volumes
- Total capacitor energy or apparent power

Suggested ways to measure efficiency or $Q = P_{out}/P_{loss}$:

- Weighted loss in realistic scenario: CEC efficiency (solar), CAFE efficiency or Q (electric vehicles), etc.
- Worst-case maximum loss, or Q at rated output power