Pearl Street
TECHNOLOGIES

Equivalent Circuit Programming for Power Flow Model Optimization in SUGAR

Marko Jereminov, PhD
Senior Research Scientist

October 5, 2021

Need for a robust and efficient optimization toolbox

- Solving power flow optimizations is **essential but challenging** in general:
  i. Highly nonlinear and **nonconvex problems**
  ii. **Fast and robust** optimal solution **required** for large scale problems

FERC: today's "approximate-solution techniques may unnecessarily cost tens of billions of dollars per year" and "result in environmental harm from unnecessary emissions and wasted energy."[1]

- **Generic algorithms** and toolboxes **independent** of problem "physics"

Define a model and an objective

$f(x)$ $\nabla f(x)$ $\nabla^2 f(x)$

Optimal Solution?

Circuit simulation and SPICE

- Initially performed within an optimization framework, but from 1970s branched out in search for better efficiency
- Developed **robust** simulation techniques to reduce dependency between **problem size and efficiency** (billion+ nodes problems)

Domain Specific Knowledge

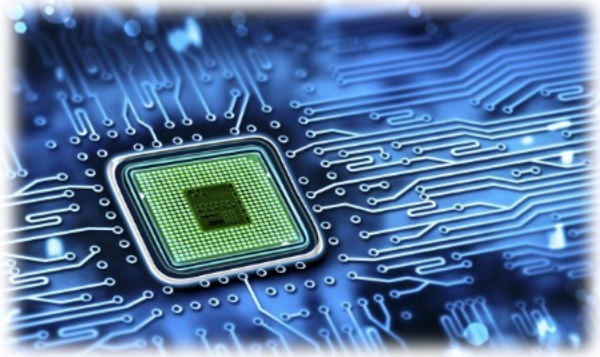

Physics-Based Models

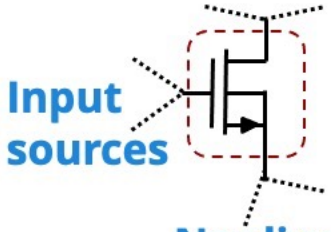

We know a great deal about the physics of the grid and how it "should" behave – can we exploit this for grid-focused, physics-based optimization?

Introducing SUGAR

Suite of **U**nified **G**rid **A**nalyses with **R**enewables

- Reformulates power flow model in terms of currents, voltages and admittances
- Inspired by the technology that enables the design of billion-node computer chips
- Validated against standard commercial software with real CEII cases and compatible with industry-standard data formats
- Based on licensed technology from Carnegie Mellon University

IC simulation methods

Flexible interface for user-defined analyses

Domain specific insights

SUGAR

SUGAR models

- **Equivalent circuit models** representing a network of admittances and voltage sources exactly capture power system response at a steady-state
- Solving for the **currents**, **voltages** and **admittance** of an equivalent circuit corresponds to the traditionally formulated power flow solution

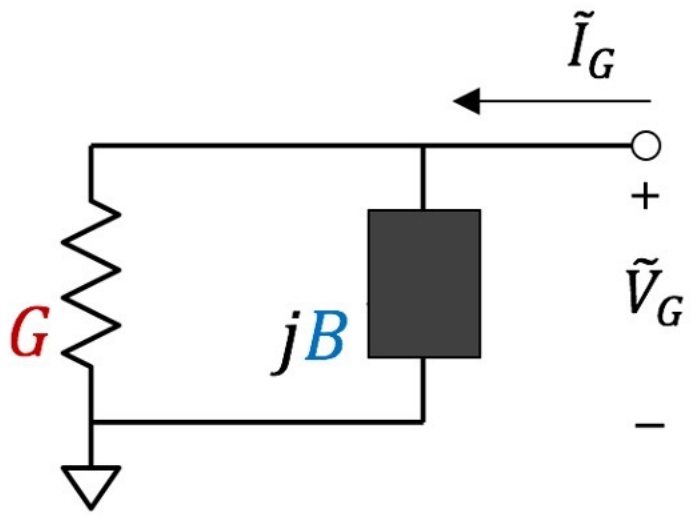

- Solve for the value of G that **absorbs** specified real power value
- Solve for the value of G that **supplies** optimal power to the system
- Solve for the value of B that **maintains** the bus voltage to a specified point

*M. Jereminov, "Equivalent circuit programming," Ph.D. dissertation, Dept. of Electrical and Computer Eng., Carnegie Mellon Univ., Pittsburgh, PA, USA, Aug. 2019.

Equivalent Circuit Programming (ECP) within SUGAR

Nonlinear Power Flow

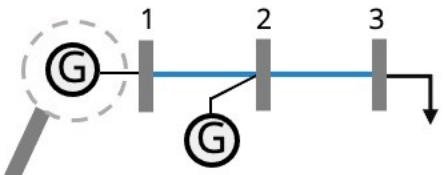

Optimization

Objective $\mathcal{F}_{obj}$
+ Constraints

- Minimize infeasibilities
- Minimize expansion cost
- Optimize grid restoration
- Minimize generation cost
- ...

Newton Raphson

Formulate the dual KKT conditions as an equivalent circuit

Linearized split-circuit (I-V)

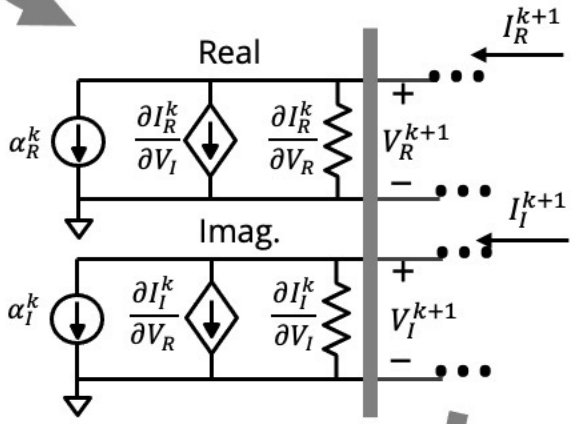

Adjoint split-circuit (I-V)

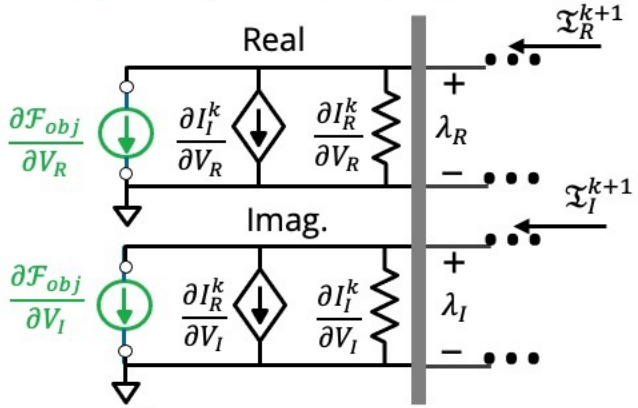

Together represent the first-order optimality conditions

Solve in SUGAR with ECP algorithms

Advantages of circuit perspective on optimality conditions

- Developed set of **powerful (ECP) methods and techniques** to ensure numerical stability and robustness of SUGAR optimization capabilities
  - **Fusing** the best from **optimization theory** with decades of successful and advanced research in the **field of circuit simulation**
- **Passivity** of adjoint (dual) circuit ensures **optimality**
  - **Ensuring** passivity during the solution process ensures an optimality of the obtained solution
- **SUGAR based optimization framework** is presently used in **industry** for planning analyses of real power flow cases
  - Can robustly **include** steep discrete nonlinear models, etc.
  - Decreases engineering time **from months to minutes**

Implicit modeling of discrete behavior

- **Design** the adjoint circuit to achieve the **desired properties** of optimal solutions
  - **Reverse-engineering** it to mathematical objectives and constraints on power system response
- **Implicitly** include discrete behavior of power grid models **within a single optimization solve**
  - Automatic voltage control (AVR)
  - Realistic grid control modes
  - Generator switch
  - Branch switch, etc.

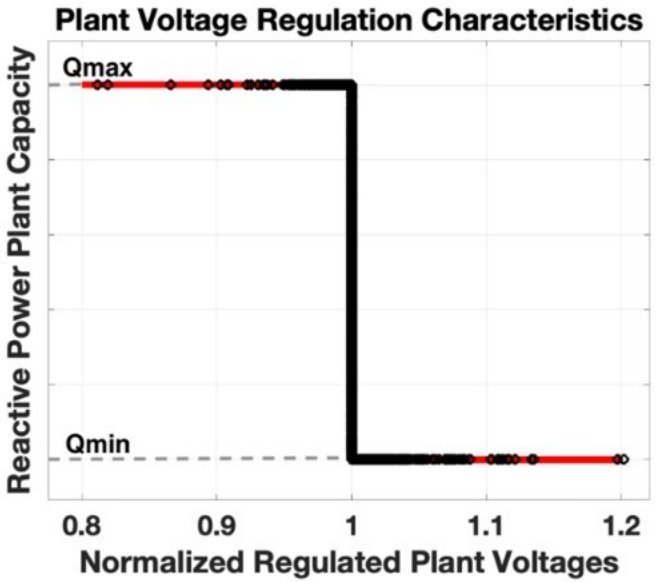

SUGAR in GO Competition 2

- **Trials 1 and 2**:
  - Addressing the main issues from GO1
    - Developing circuit inspired cvx solver for accurate state initialization
    - Extending the SUGAR-ECP framework to include AC-OPF for real-world cases
  - Incorporating the basic AC-OPF models
  - Cleaning/debugging the models through platform submissions
- **Trial 3**:
  - Incorporating models for discrete device variables
- **Final Event**:
  - Included binary switching behavior of generators
  - Extensive testing

PST results analysis and comparisons

- **Same submission for all 4 divisions**: SUGAR runs all cases within <5 min timeframe
- Results improve with **cleaner** models and **more constraints incorporated**
- **Generator/branch switching** included post T3 submission

Event	Ensembled	T2 MS gain	Post T2 MS gain	Post T3 MS gain
Trial 2	3,845,656,920 /3,934,049,14	1,392,109,398	3,166,817,581	3,600,066,871
Trial 3	210,524,387 /210,300,837	/	161,876,057	197,824,401

- **Awaiting Final Event gains**: 186,451,062 (~195M without a contingency parsing bug)

The most expensive bug we will (hopefully ever) have at PST

- **Parsing** and **applying a contingency** of a particular configuration
- **Parallel** transformer and Tx line
- Not applying a single contingency correctly gets you a default score (**zero gain**)

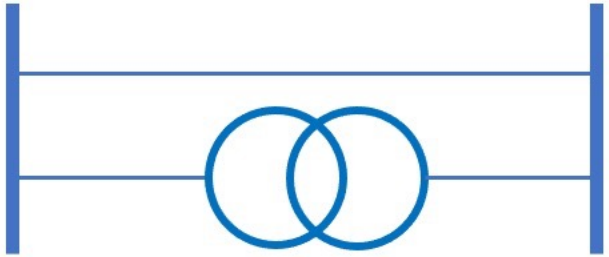

What we learned so far, and possible improvements

- Spending **more time** cleaning the data **developing models** for submissions
- Network design **matters**
  - SUGAR discovered cases with better gains infeasible with switching
  - Cases where minimum load limits exceed branch ratings
  - Other non-physical synthetic model problems
- With **demand response** included more contingences are **feasible**
  - Most of the obtain network results were fully secured
  - We could still better consider the effect of infeasible corner cases

Conclusions

- SUGAR facilitates **fusion** of the **best properties** of **circuit simulation** and **optimization algorithms**
  - **Increases** the efficiency and improves the robustness
  - **Decreases** the dependency between the solution process and problem size
  - **Allows** for extremely large-scale optimization problems
  - **Enables** implicit incorporation of challenging discrete models within power flow optimization
- Significant improvements toward **realistic power system** simulation and optimization problems

Pearl Street
TECHNOLOGIES

GO Competition Team Members

Marko Jereminov, Ph.D. (team lead)

Hui Zheng, Ph.D.

Athanasios Terzakis

David M. Bromberg, Ph.D.

Prof. Larry Pileggi

David Bromberg, Ph.D.
Co-founder and CEO

Prof. Larry Pileggi
Co-founder and Chairman

Hui Zheng, Ph.D.
Co-founder

Marko Jereminov, Ph.D.
Senior Research Scientist

Athanasios Terzakis
Computational Software Engineer

Joseph Silvers, P.E.
Lead Application Engineer

Alessandra Leuzzi-Botello
Full Stack Software Architect

John Kieffer
Computational Software Engineer

Mariella Arias
Frontend Software Engineer