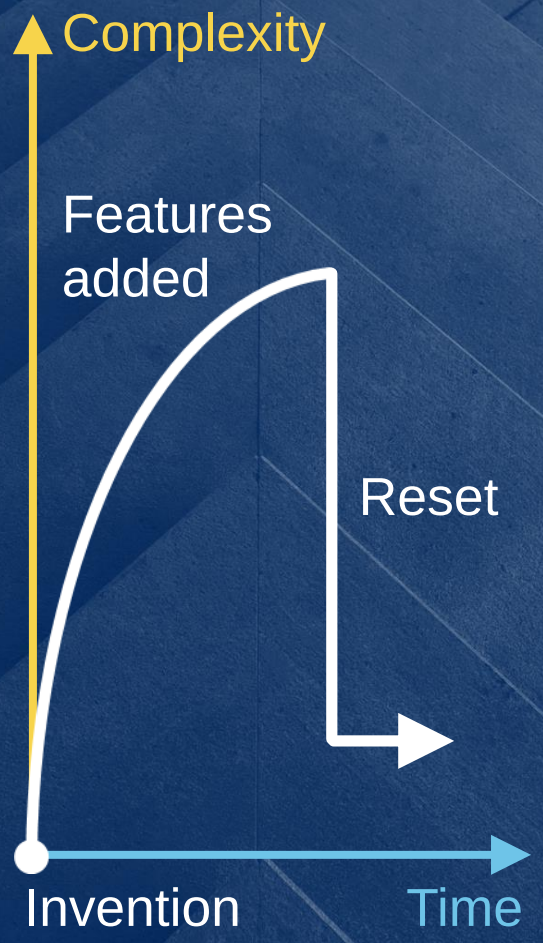

Challenges and Solutions in Microgrid Controls and Protection

Scott Manson
SEL ES Technology Director

© SEL 2020

Recent microgrid advancements

Conventional solution

Advanced relay solution

Self-configuring communications

No tuning controls

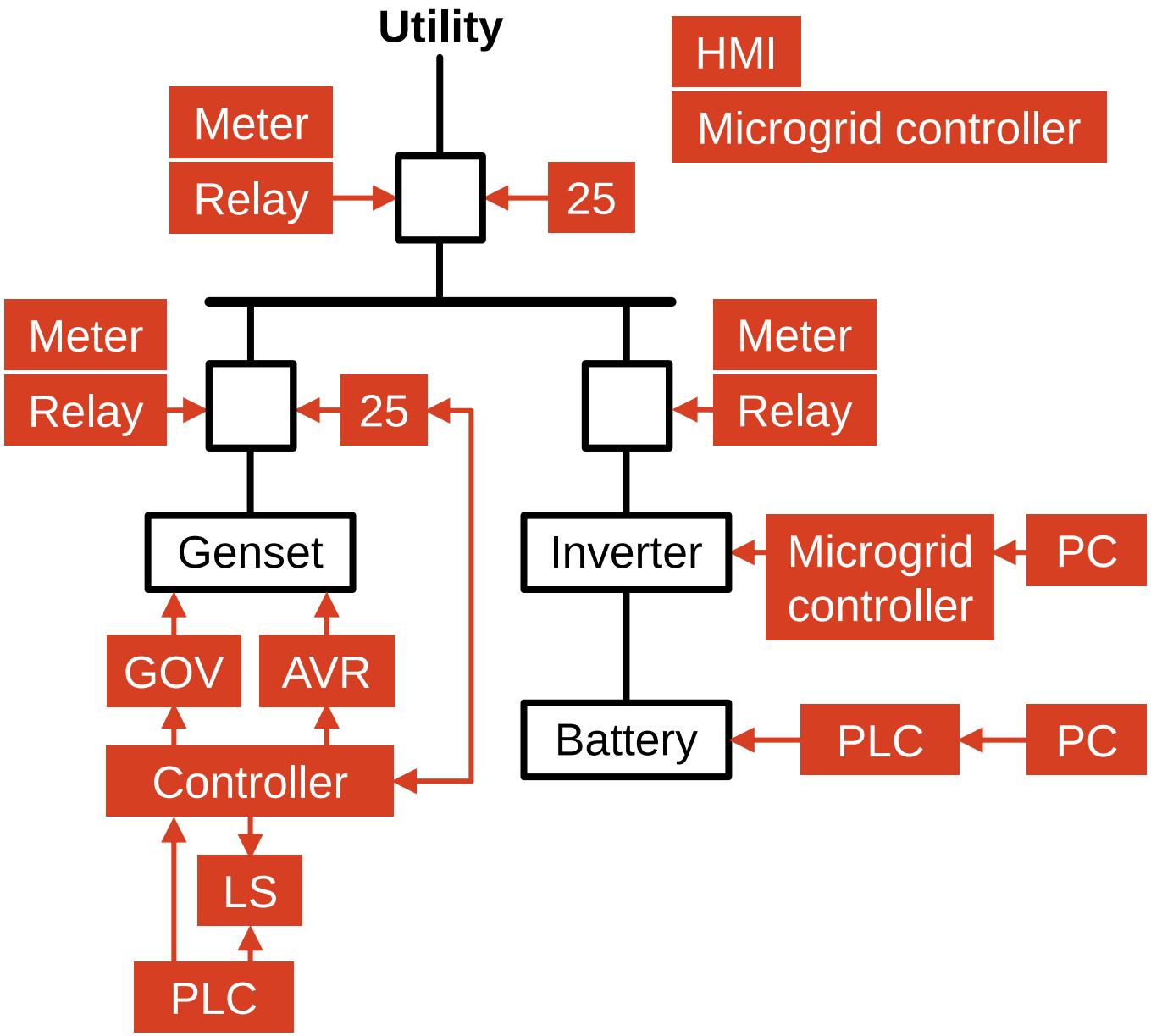

Recent microgrid advancements

Conventional solution

Advanced relay solution

Self-configuring communications

No tuning controls

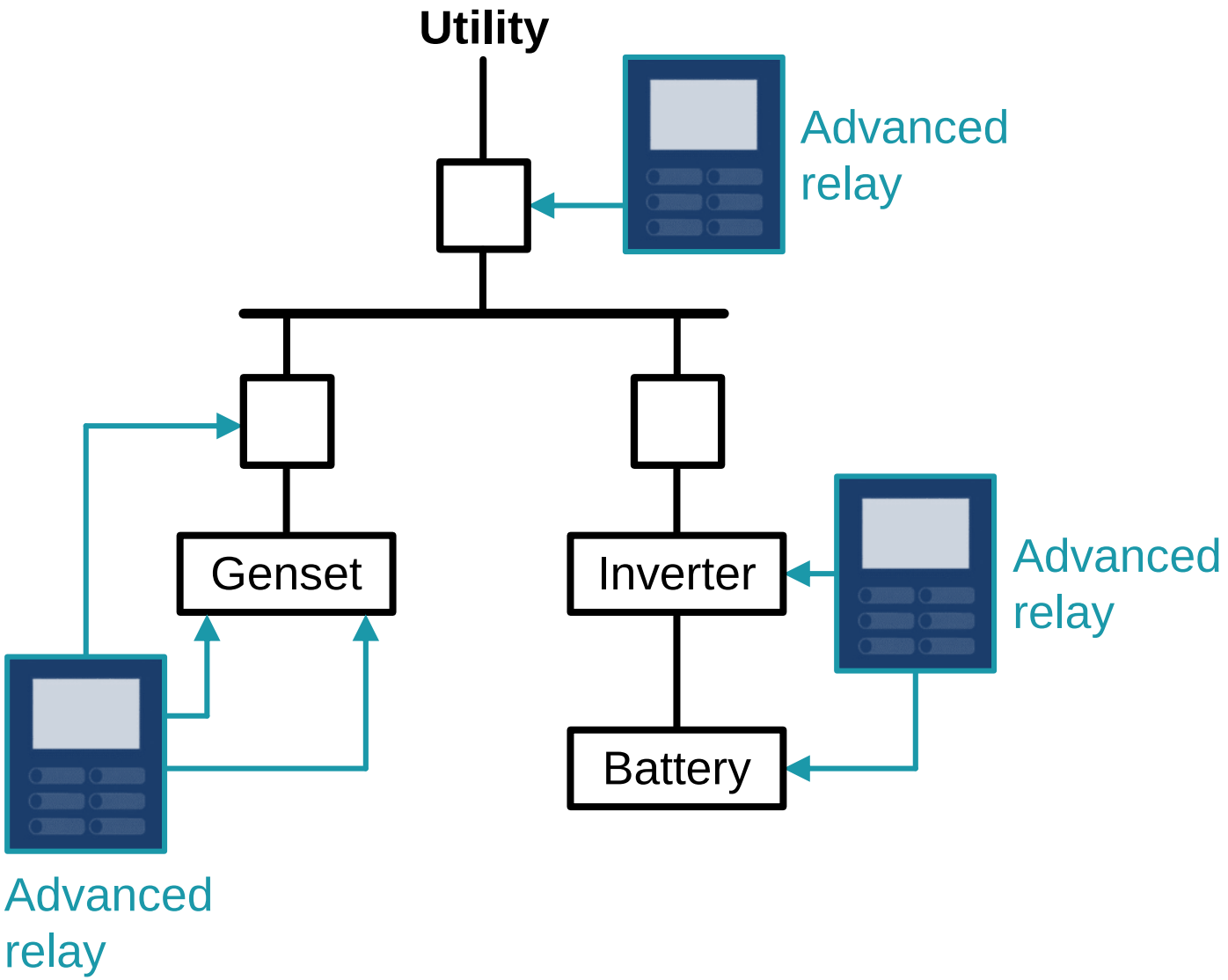

Recent microgrid advancements

Conventional solution

Advanced relay solution

Self-configuring communications

No tuning controls

Tactical Microgrid Standard

Recent microgrid advancements

Conventional solution

Advanced relay solution

Self-configuring communications

No tuning controls

Tactical Microgrid Standard

SEL

DEVCOM C5ISR CENTER

HG ENGINEERS

MIT Lincoln Laboratory

US Army Corps of Engineers®

Recent microgrid advancements

Conventional solution

Advanced relay solution

Self-configuring communications

No tuning controls

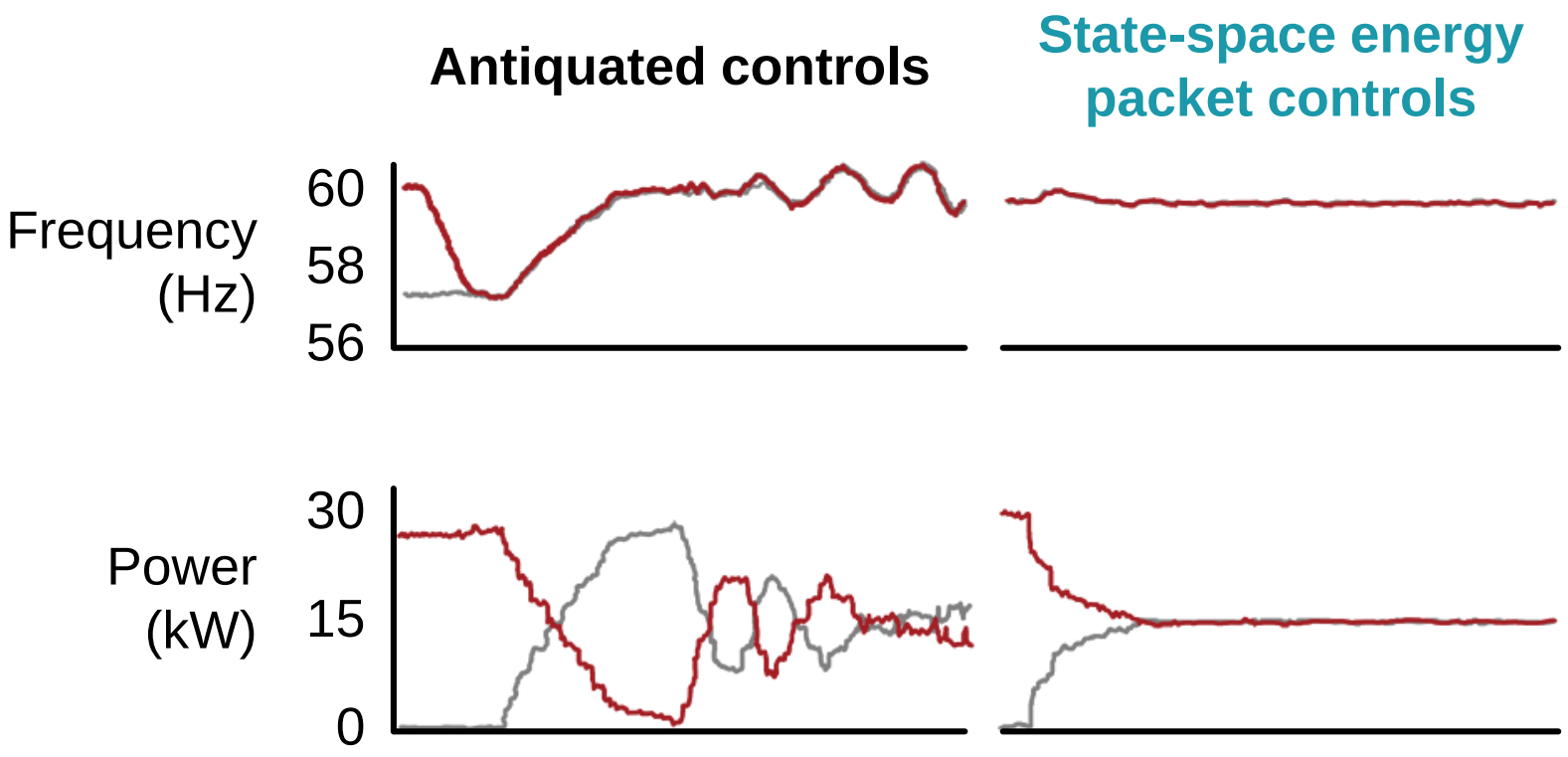

Microgrid instability caused by load efficiency improvement project

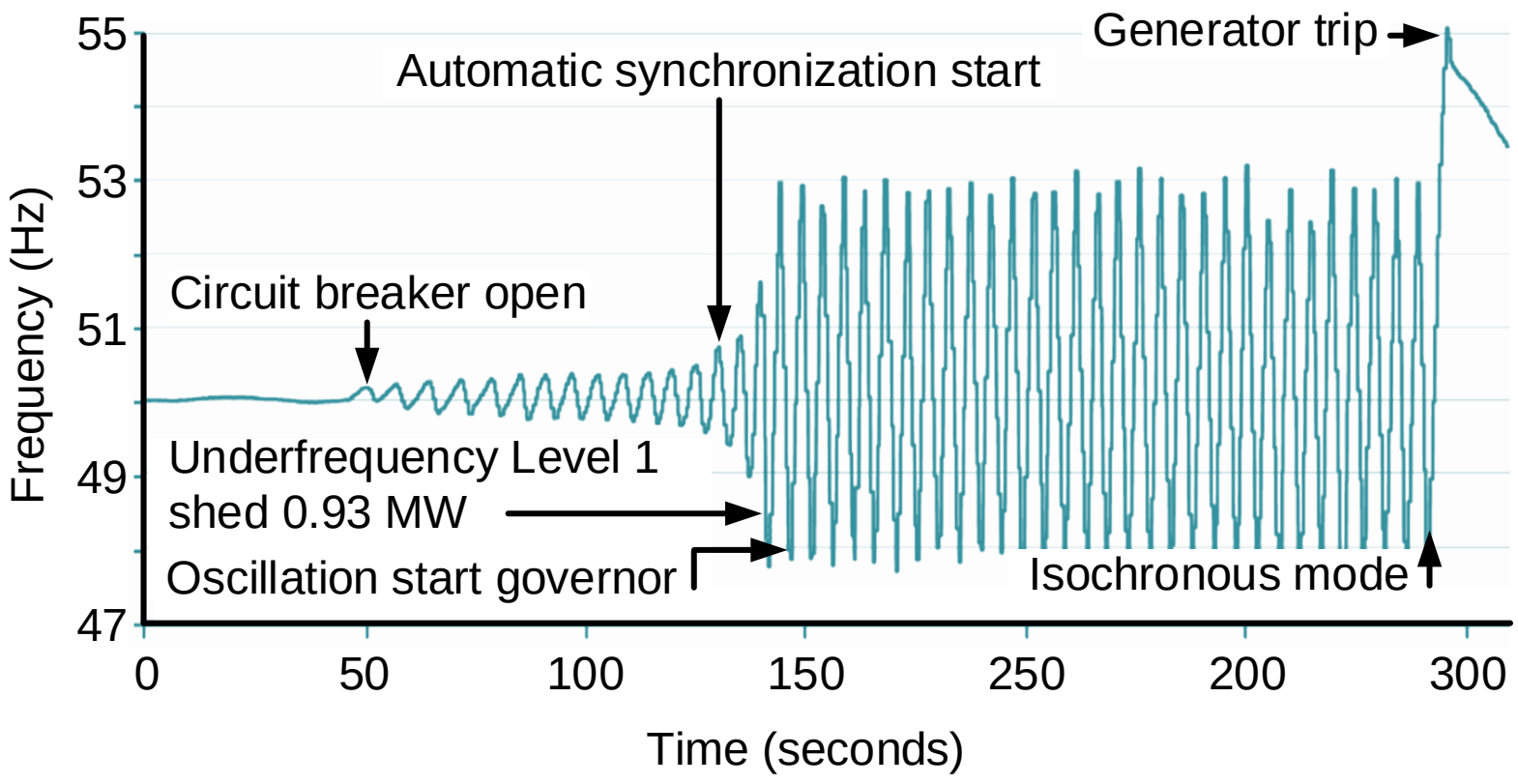

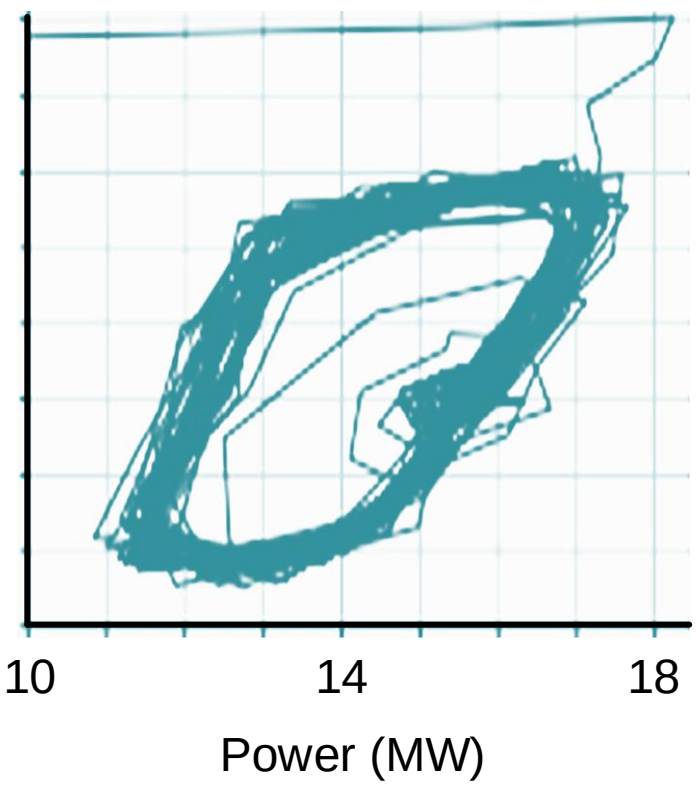

Microgrid instability caused by load efficiency improvement project

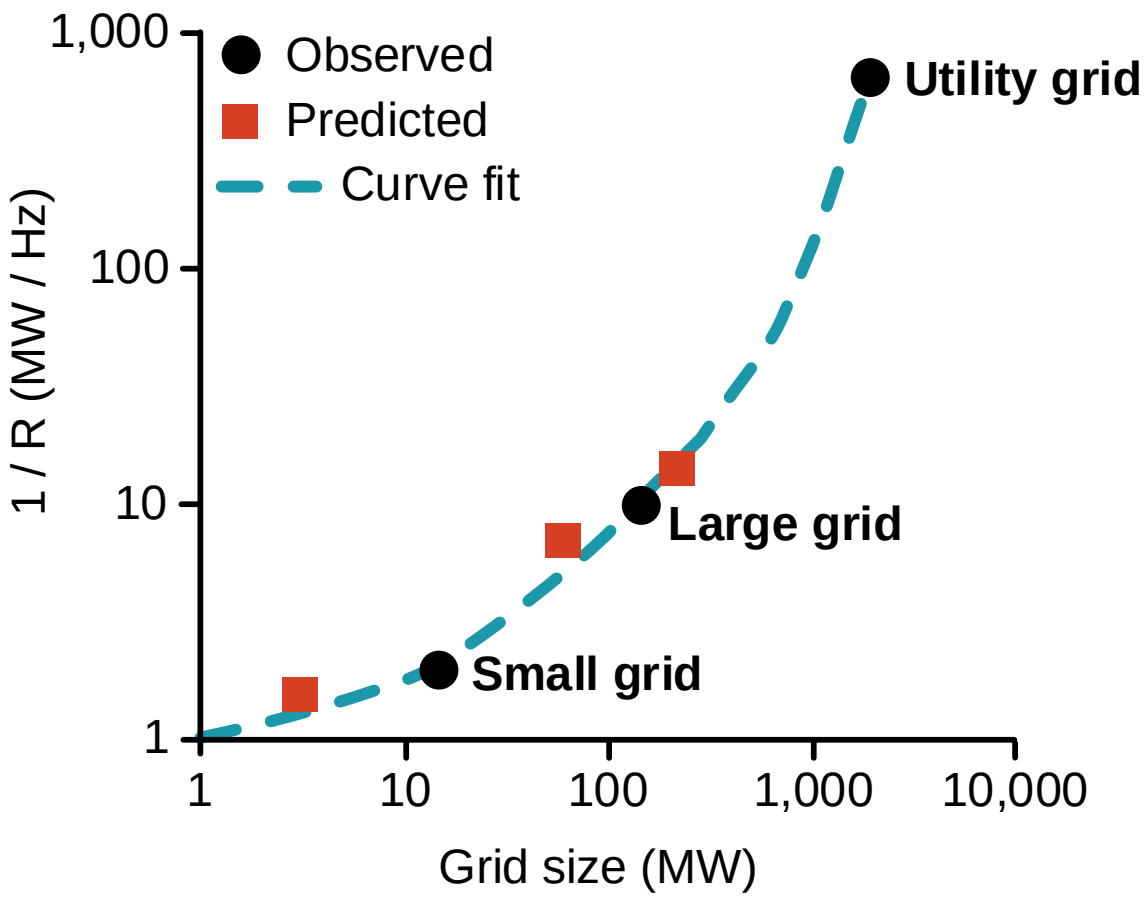

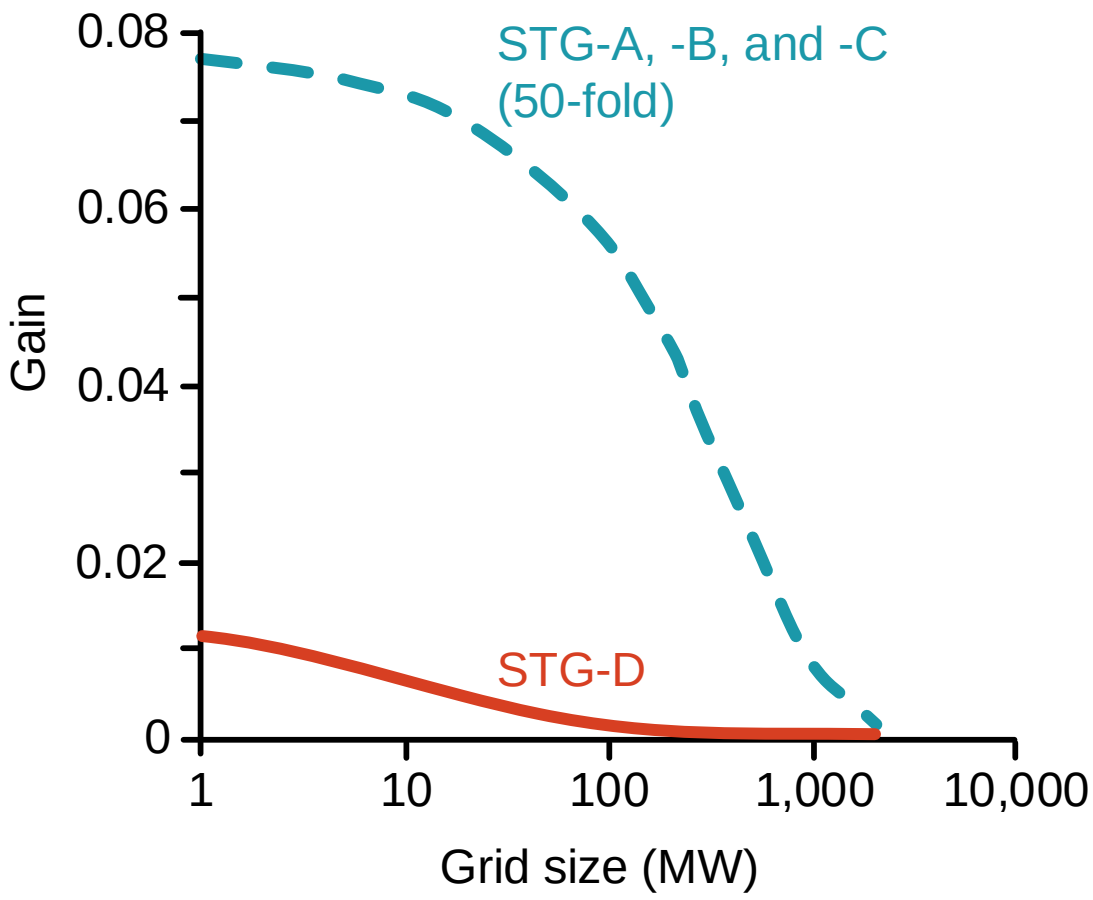

Variable load compositions negatively impact microgrid resiliency

$$R = \frac{V}{I} \qquad P = V \cdot I$$

Topology	R	–R	DOL
1	60%	0%	40%
2	50%	50%	0%

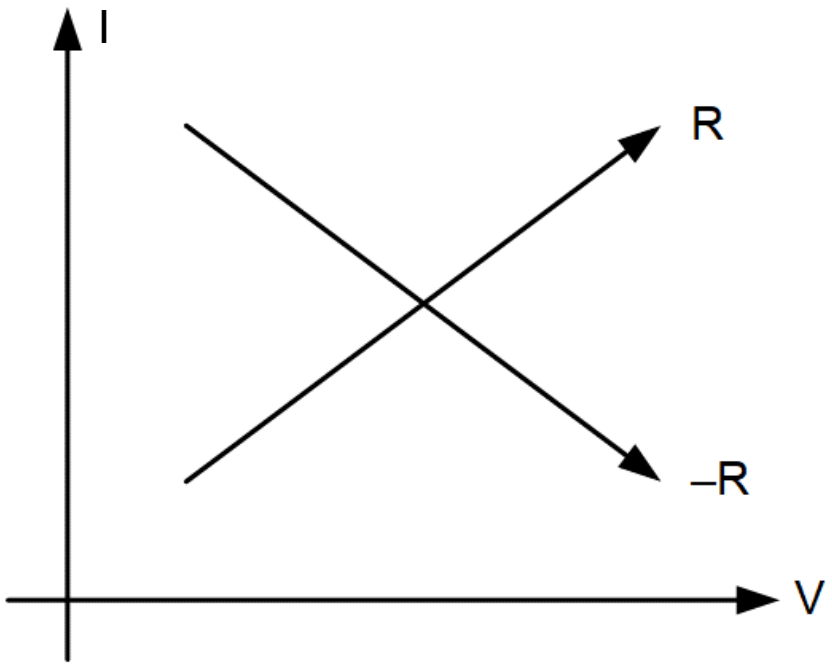

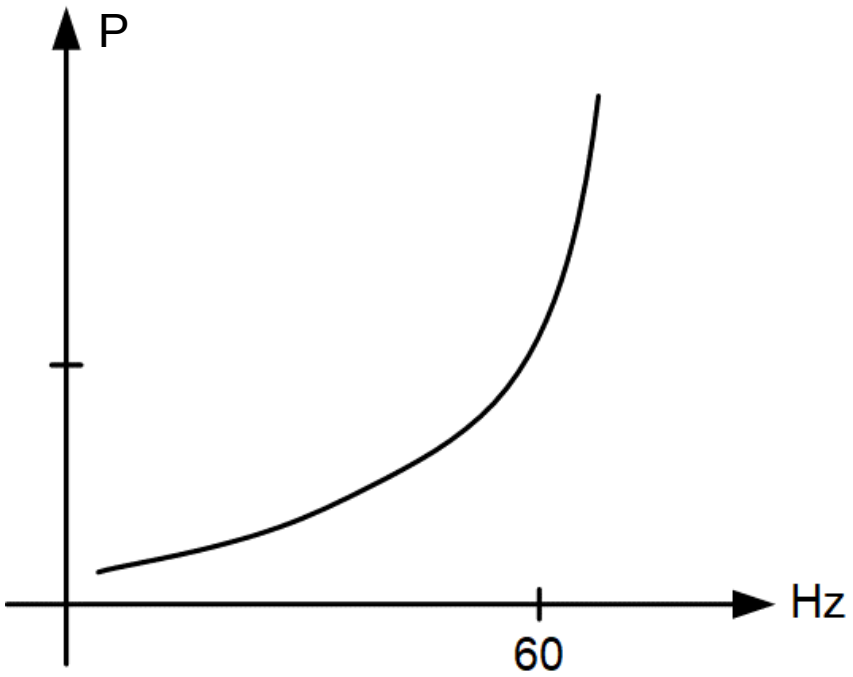

Inverters create “twitchy” power systems

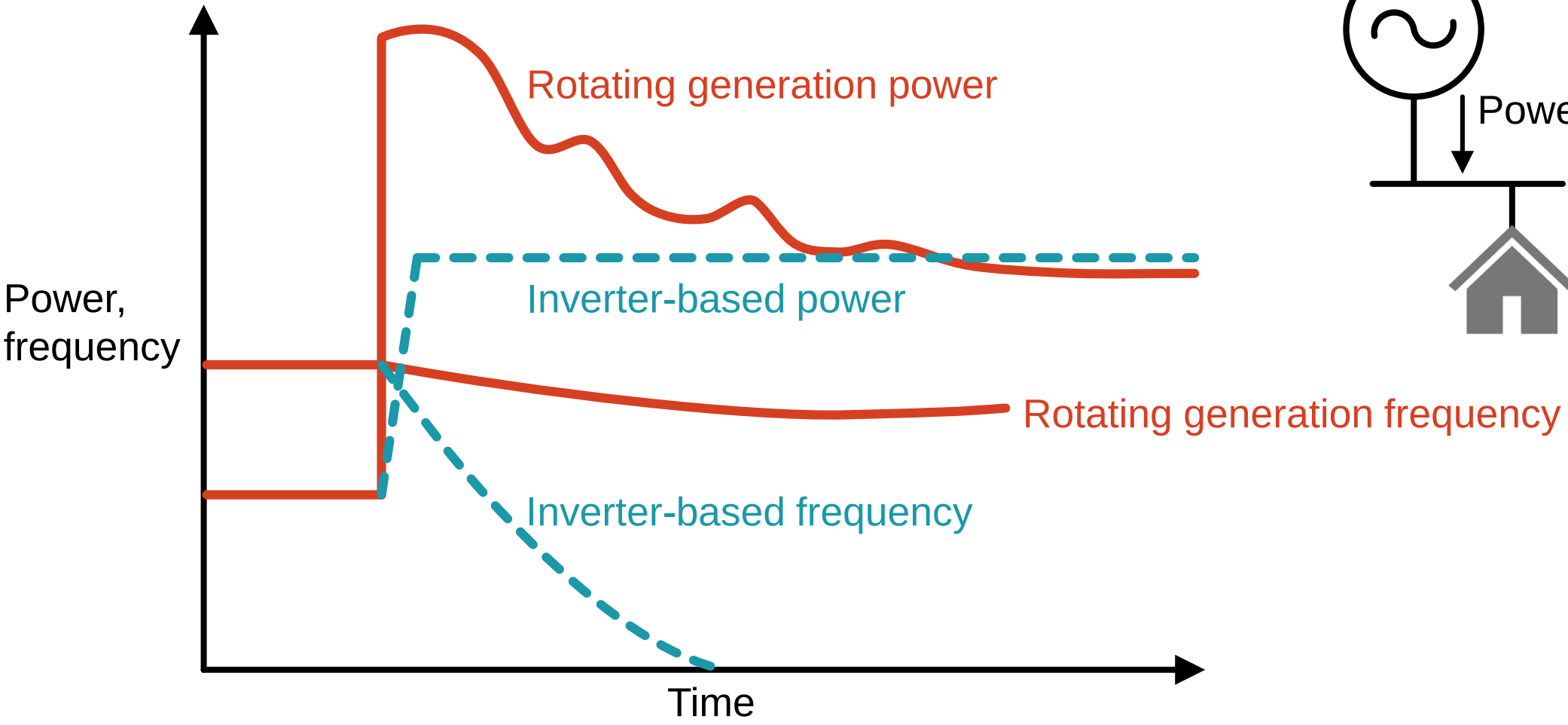

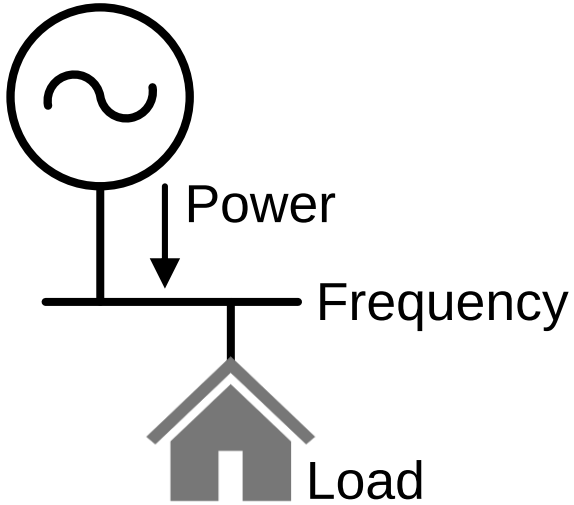

Synthetic inertia makes inverters difficult to dispatch

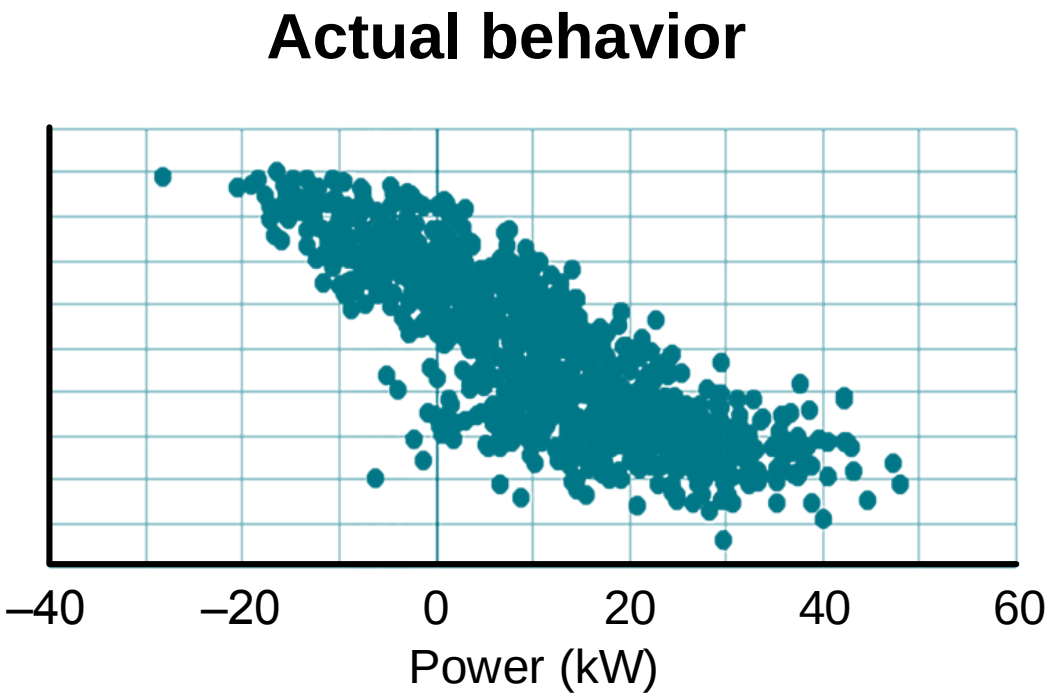

Inverters produce less fault current than generators

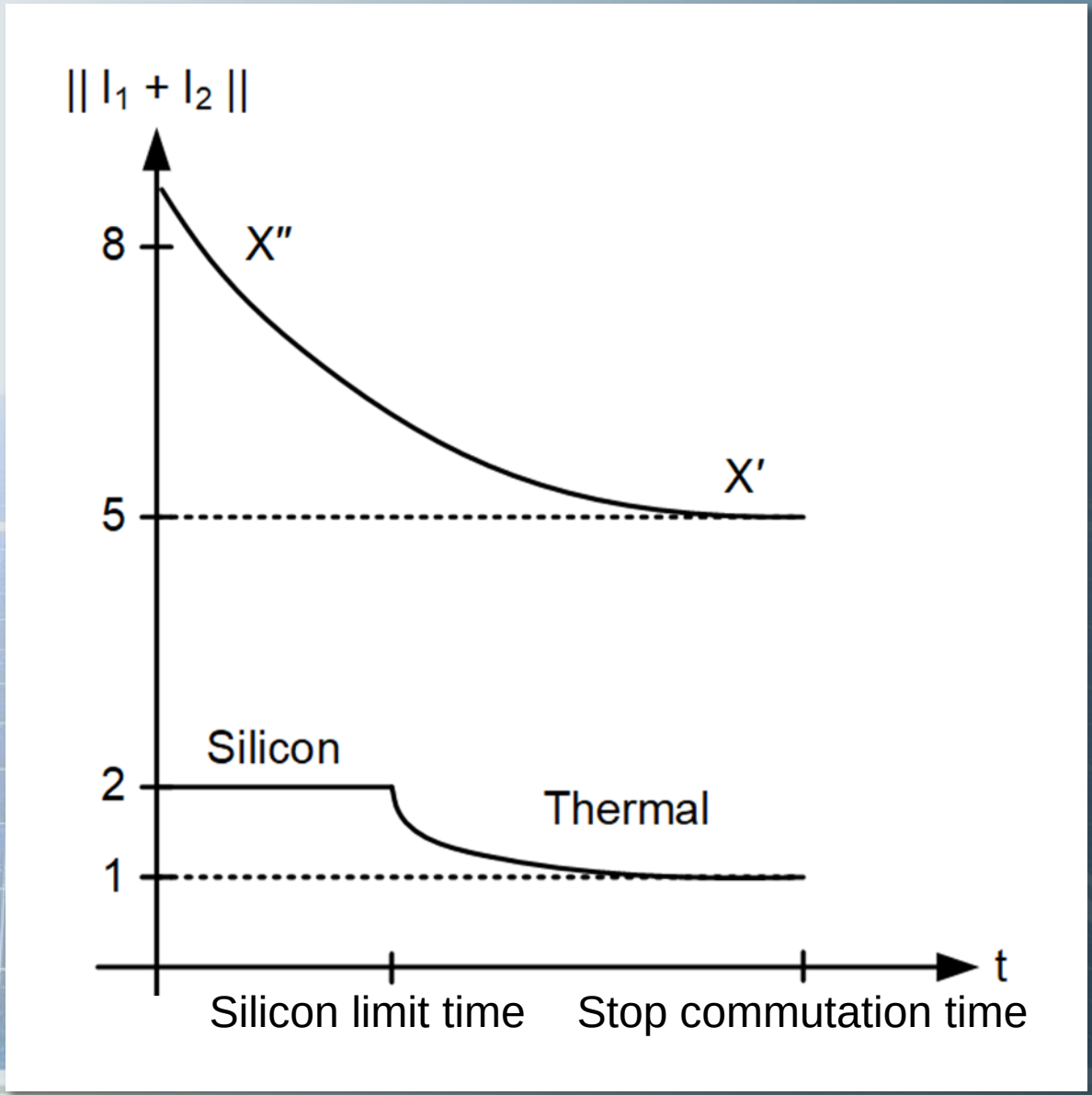

Inverter fault currents produce inconsistent Clark, Parks, and Sequence components

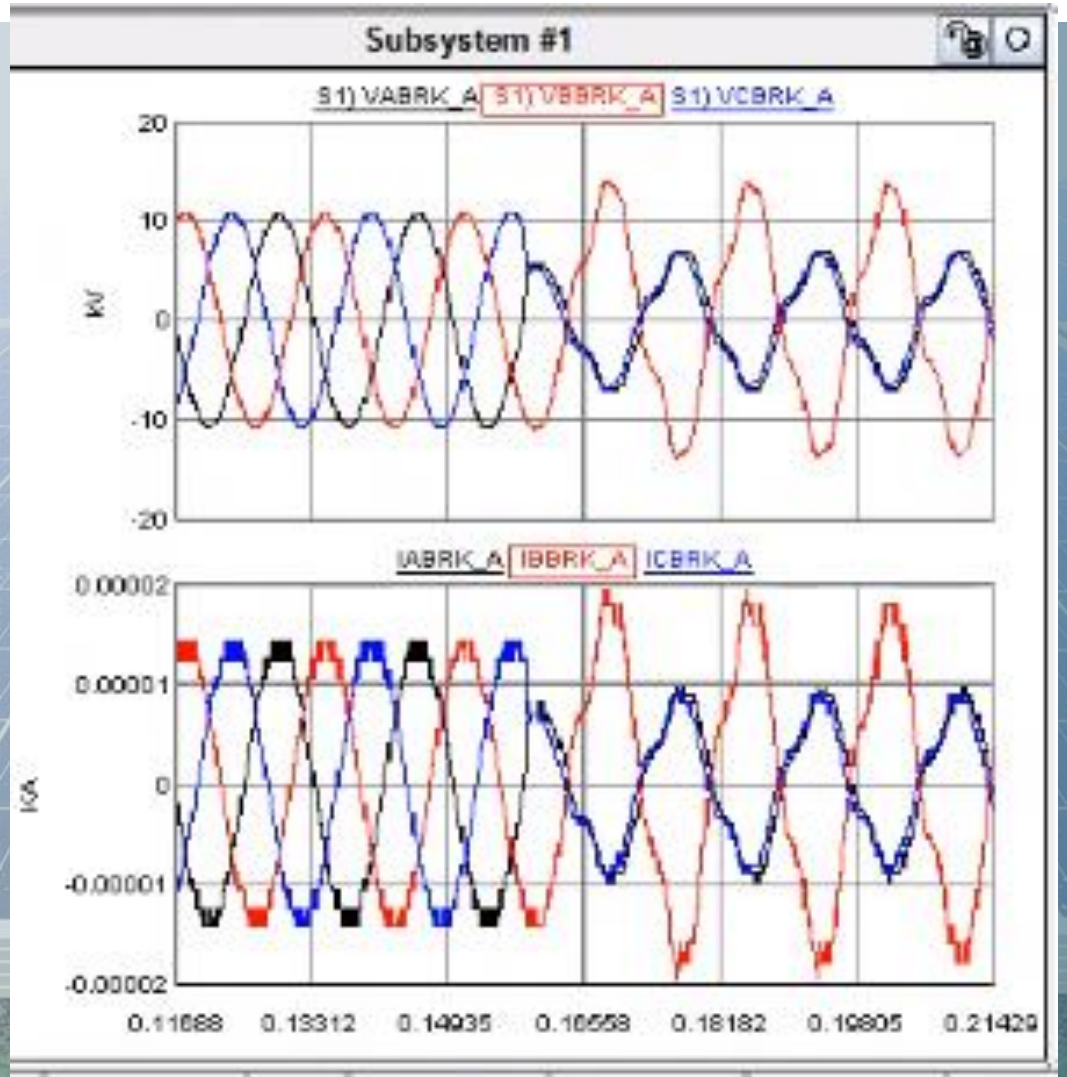

Inverter fault currents are restricted by inverter and battery health

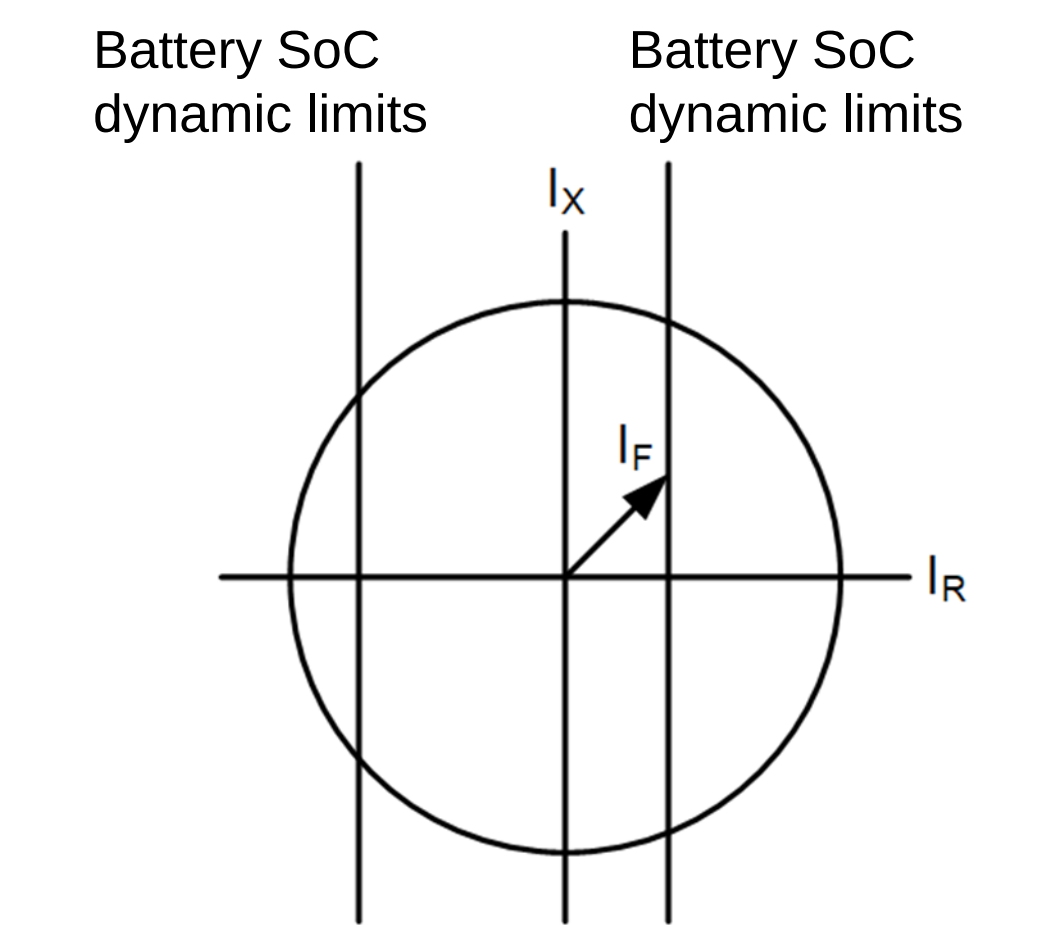

Power systems are safer when inverters are controlled by programmable relays

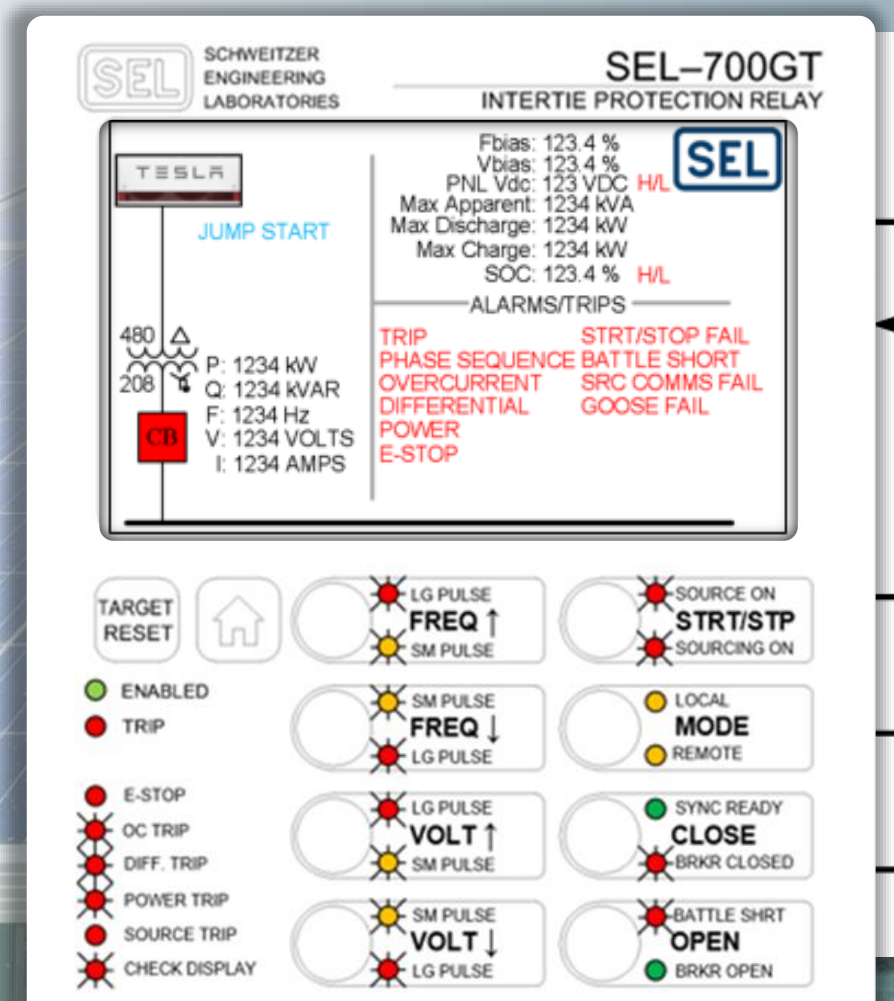

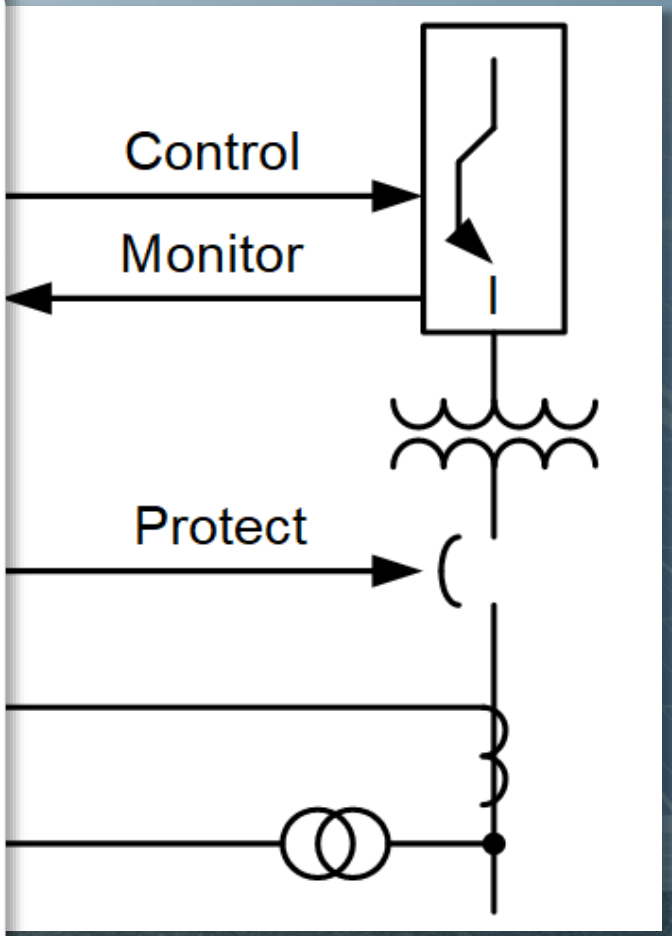

Recording shows “day in the life of a relay”

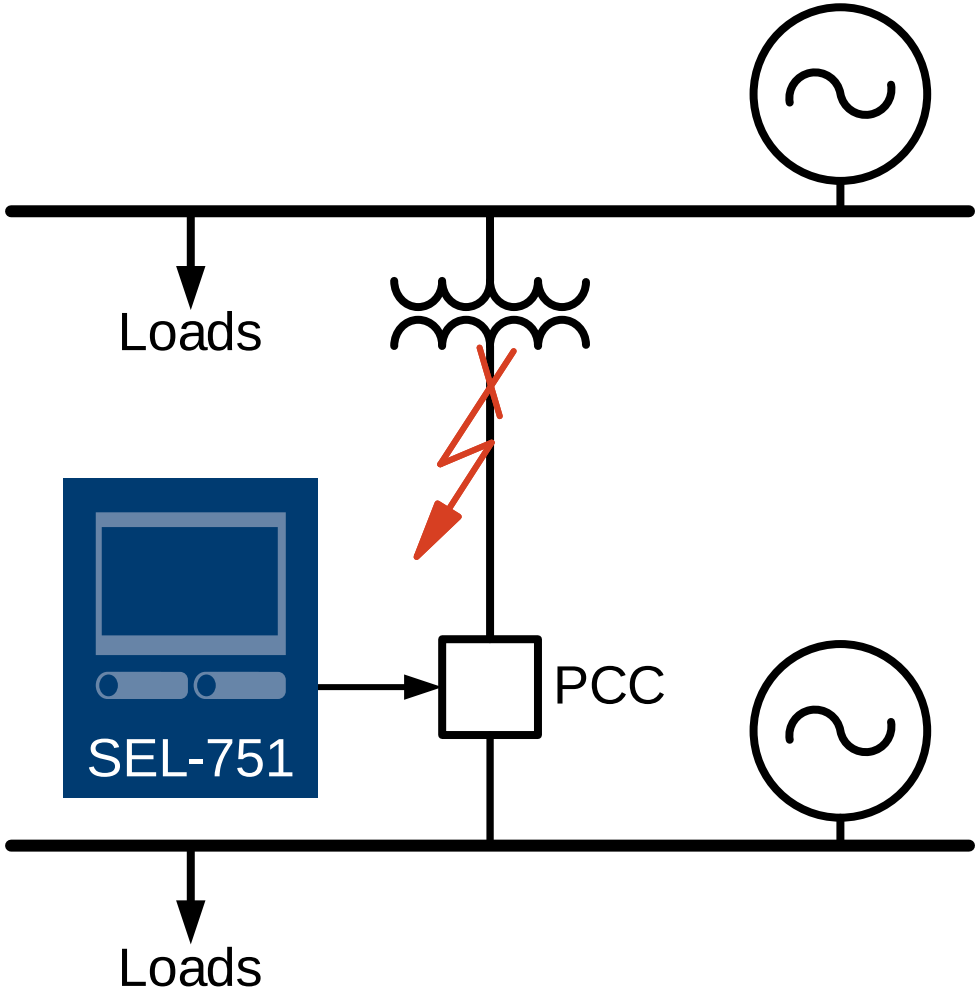

Recording shows “day in the life of a relay”

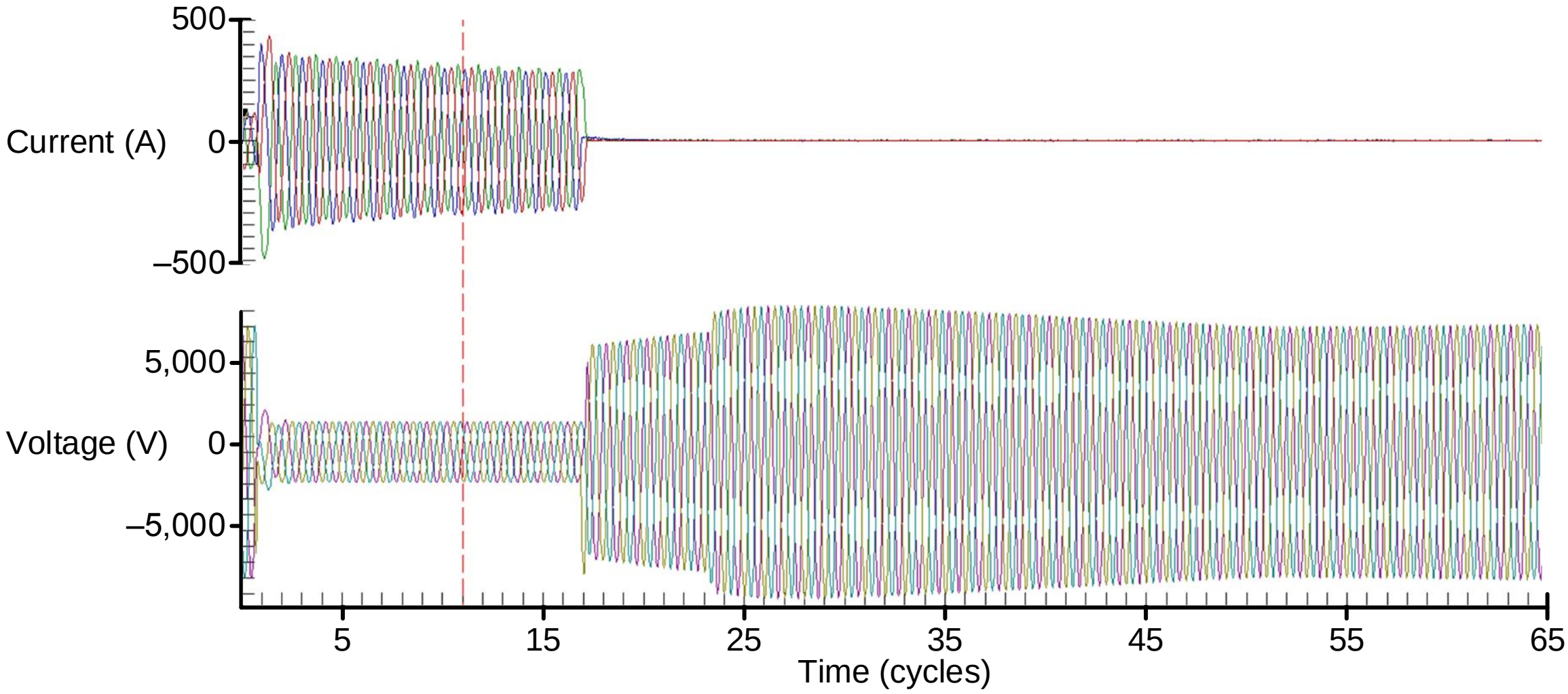

Recording shows “day in the life of a relay”

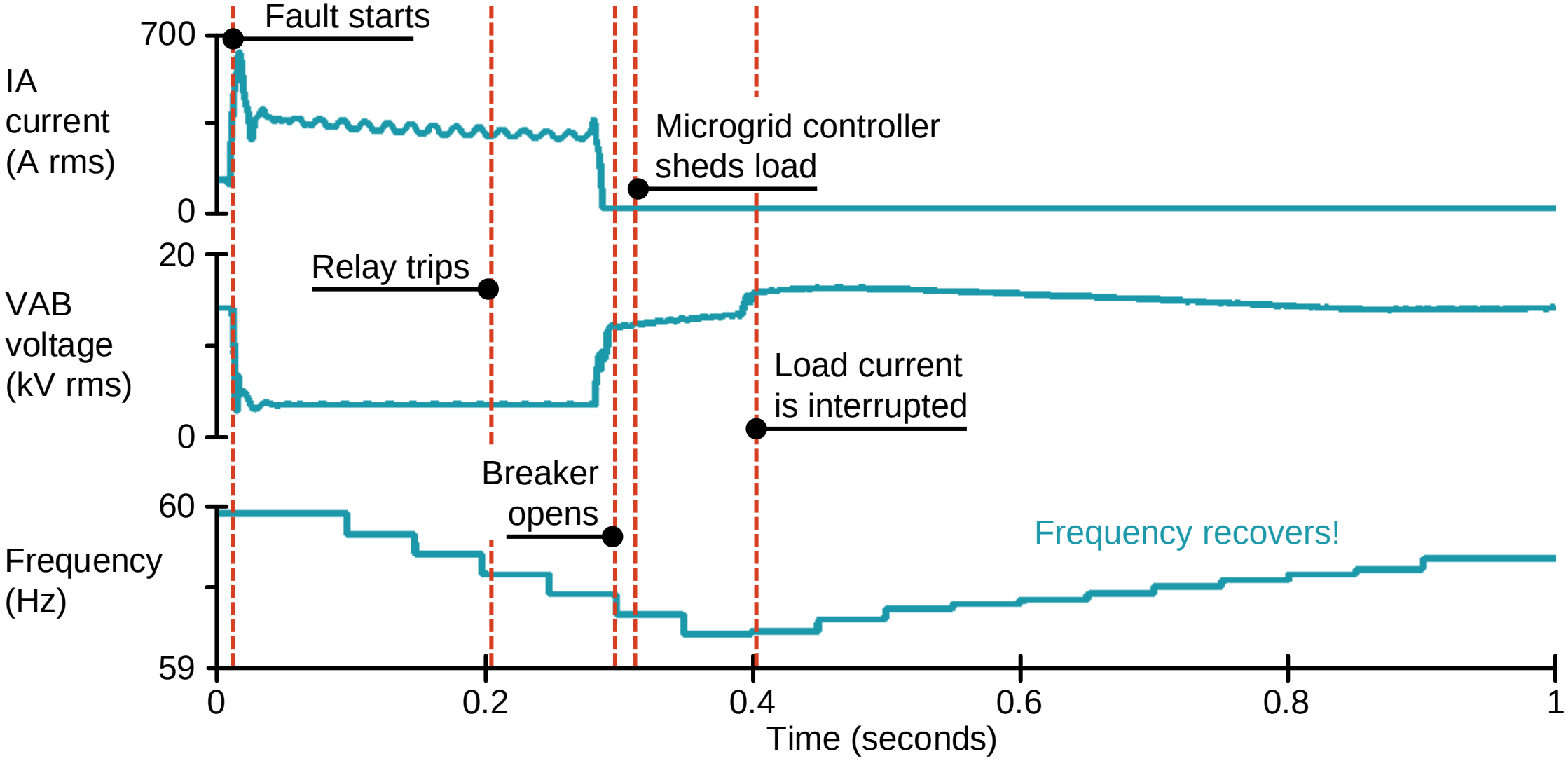

Nonresilient power system

cHIL simulation

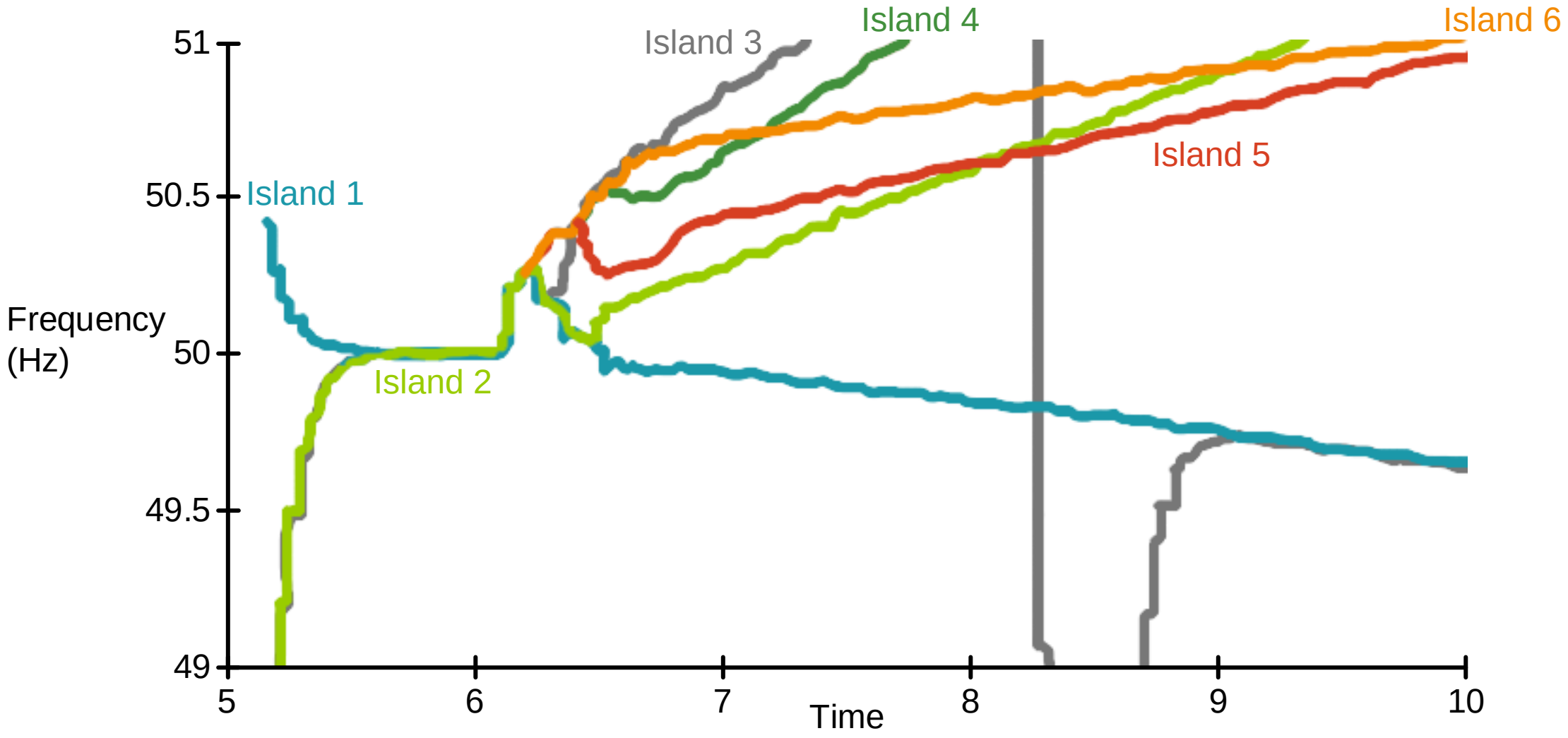

Same power system with SEL relay control

cHIL simulation

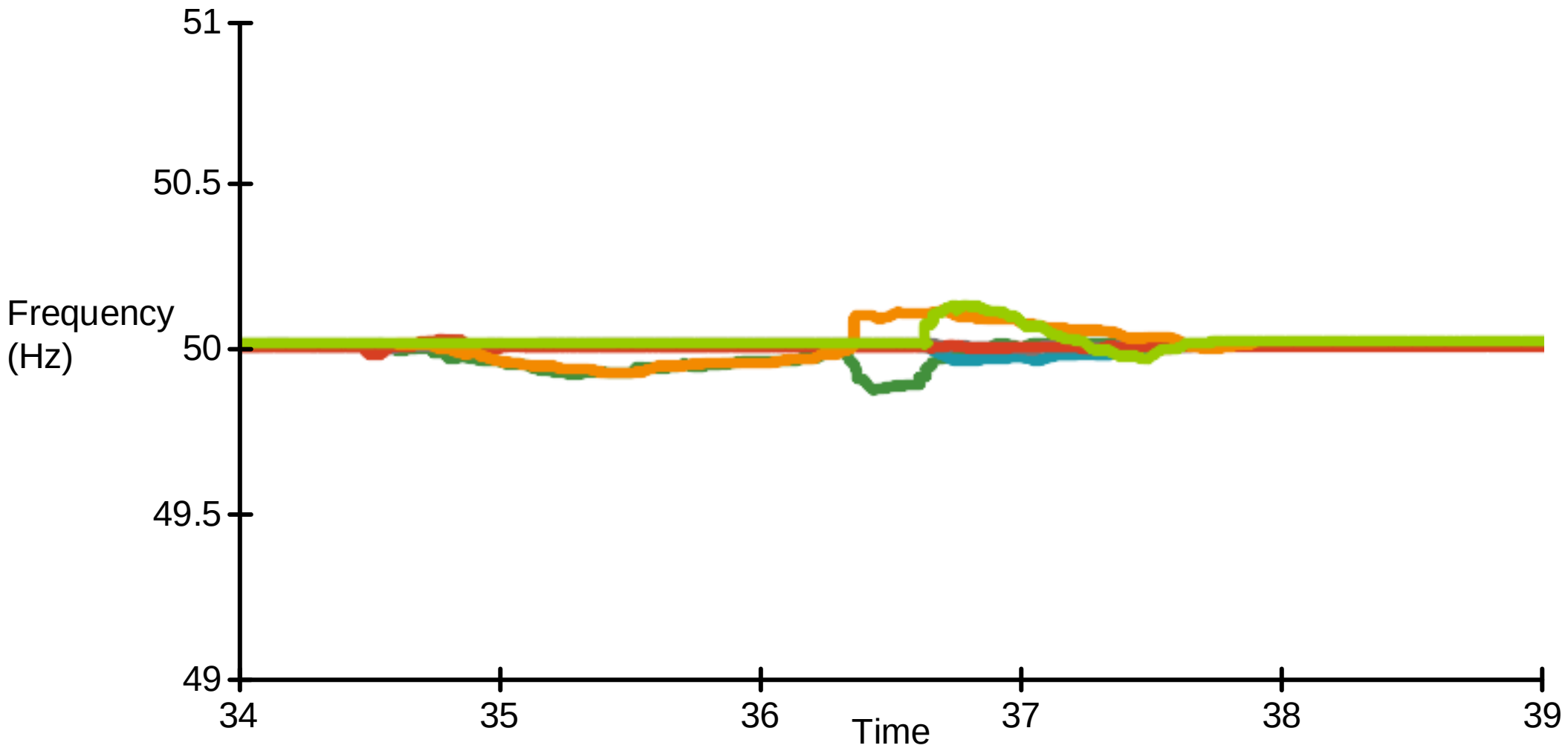

cHIL testing improves microgrid ROI

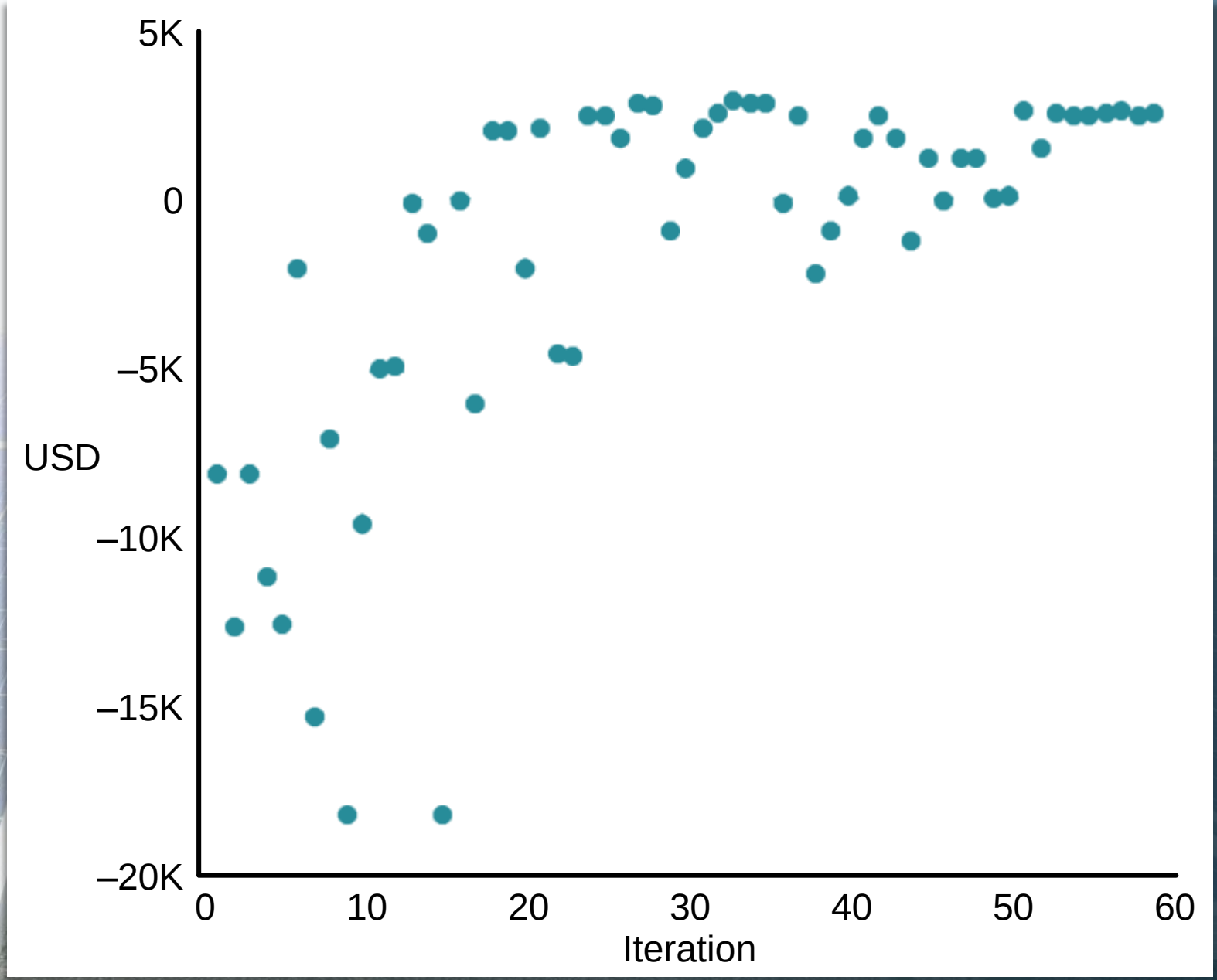

SDN simplifies security for critical infrastructure

Whitelisting	U.S. manufacturing	Vertical integration
Minimal software	Mature processes	Policy, plan, and procedure

SEL-2742S SDN Switch

Additional SEL devices

Connect with us

info@selinc.com

SCHWEITZER ENGINEERING LABORATORIES