Microgrids RESEARCH PROGRAMME

CROM
CENTER FOR RESEARCH ON MICROGRIDS

Microgrids seriously affect your brain
www.aau.dk

AD NYE VEJE AALBORG UNIVERSITET

THE VELUX FOUNDATIONS
VILLUM FONDEN VELUX FONDEN

Networks of Microgrids, Interaction with the Macrogrid

Josep M. Guerrero

Center for Research on Microgrids CROM

Aalborg University, Denmark

joz@et.aau.dk

www.crom.et.aau.dk

AD NYE VEJE AALBORG UNIVERSITET

Microgrids RESEARCH PROGRAMME

CROM
CENTER FOR RESEARCH ON MICROGRIDS

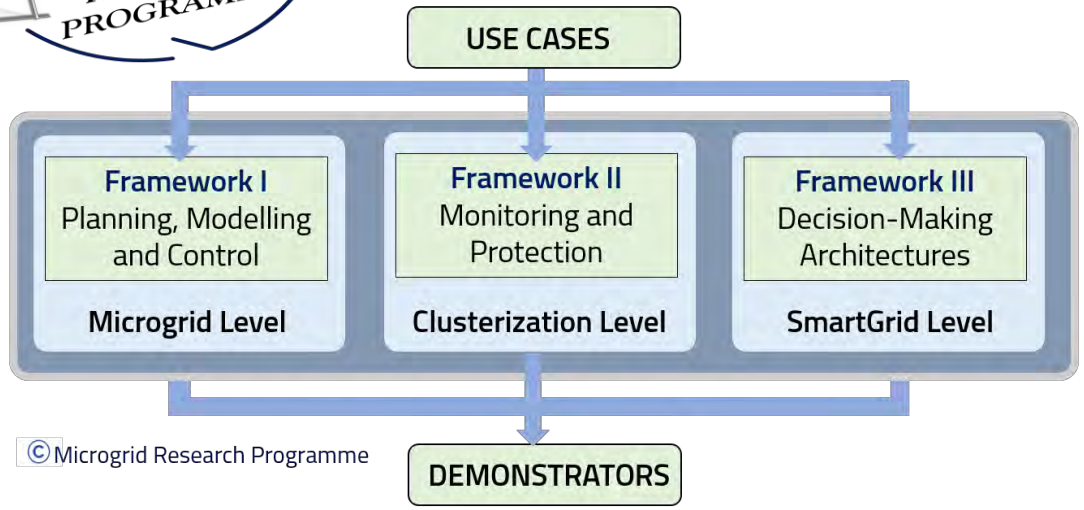

©Microgrid Research Programme

CROM vision is to develop a new research-oriented platform and framework for design, analyses and assess multiple Microgrids forming **clusters** with unprecedented levels of **scalability and expandability**, giving as a result highly efficient and resilient grids.

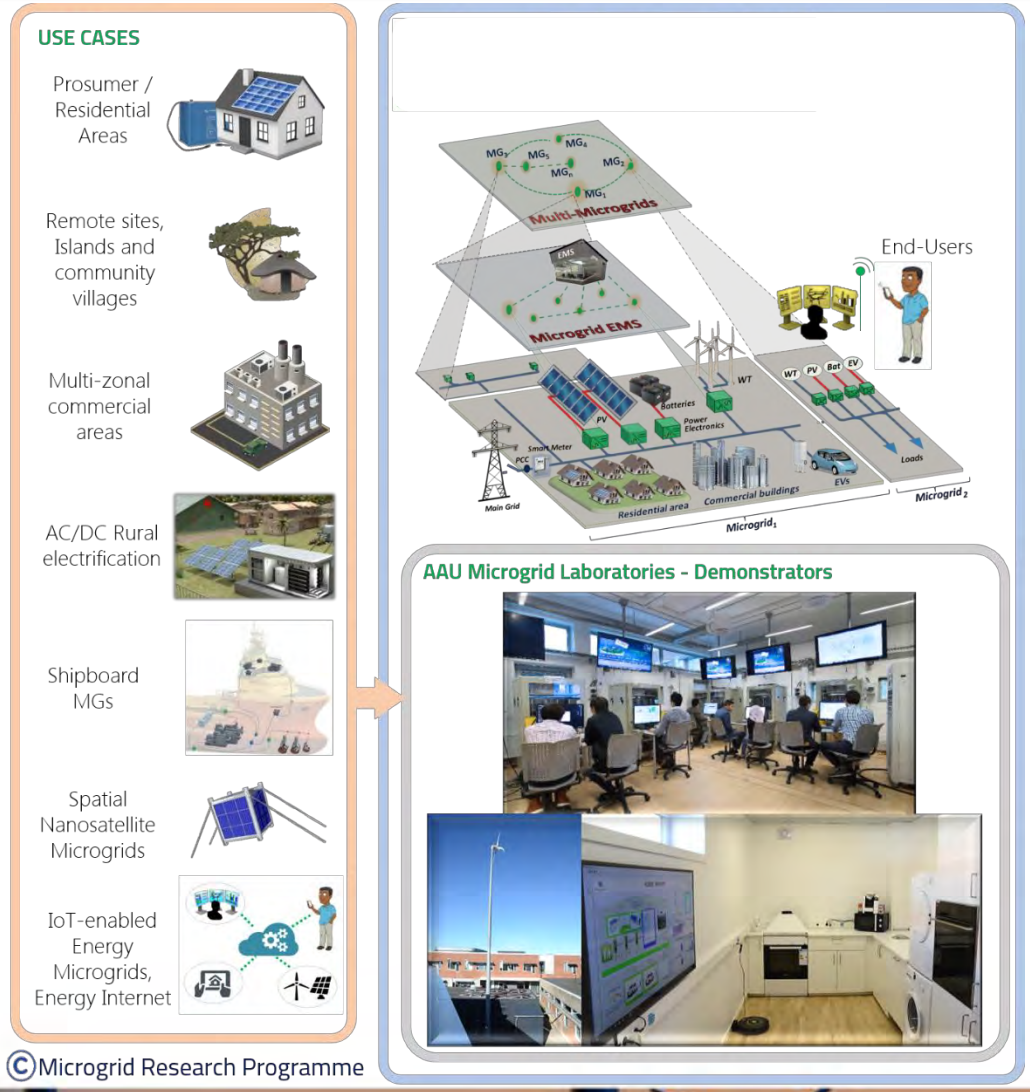

©Microgrid Research Programme

The MICROGRID concept

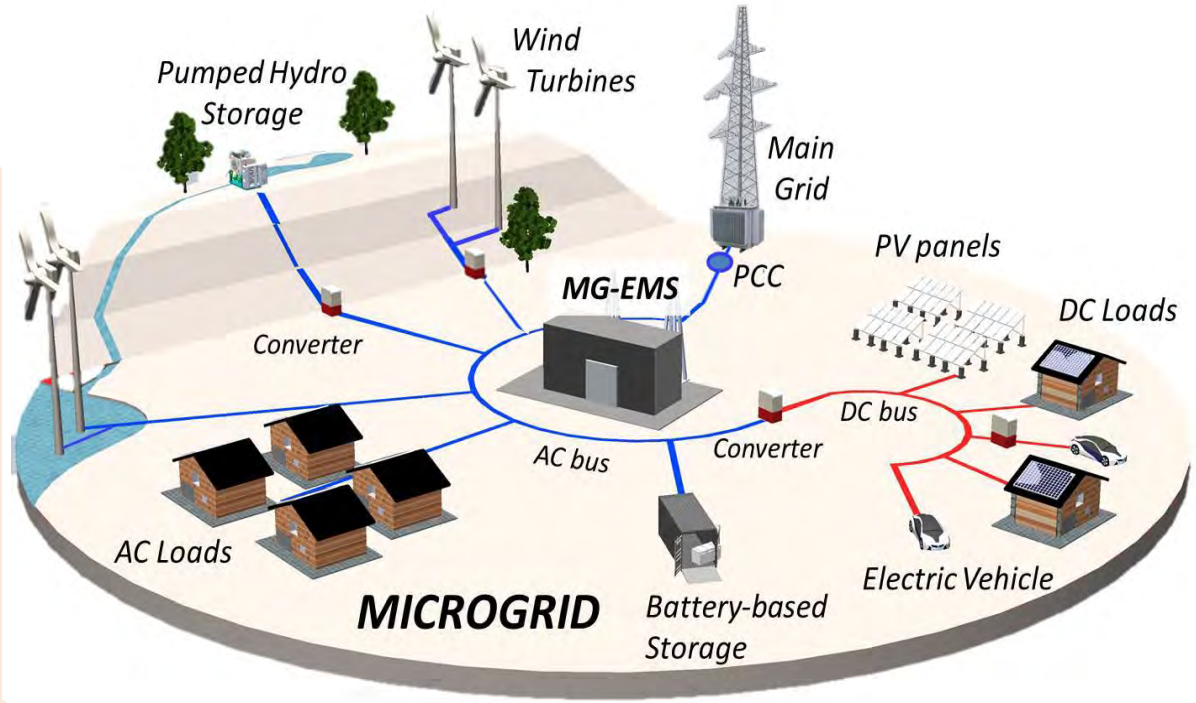

Multiple microgrid **clusters**

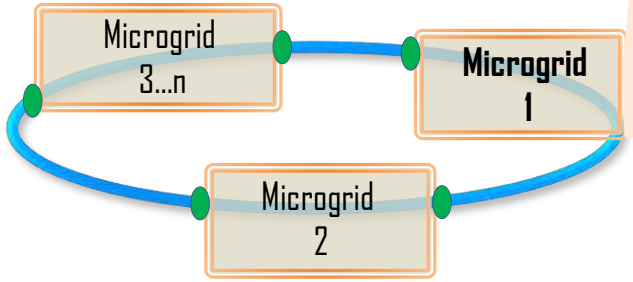

System of Systems

Microgrids does not means "small" but "onsite" grids

MGs are "building blocks" of the **Smart Grid**

The Smart Grid concept – Multi Microgrid Clusters

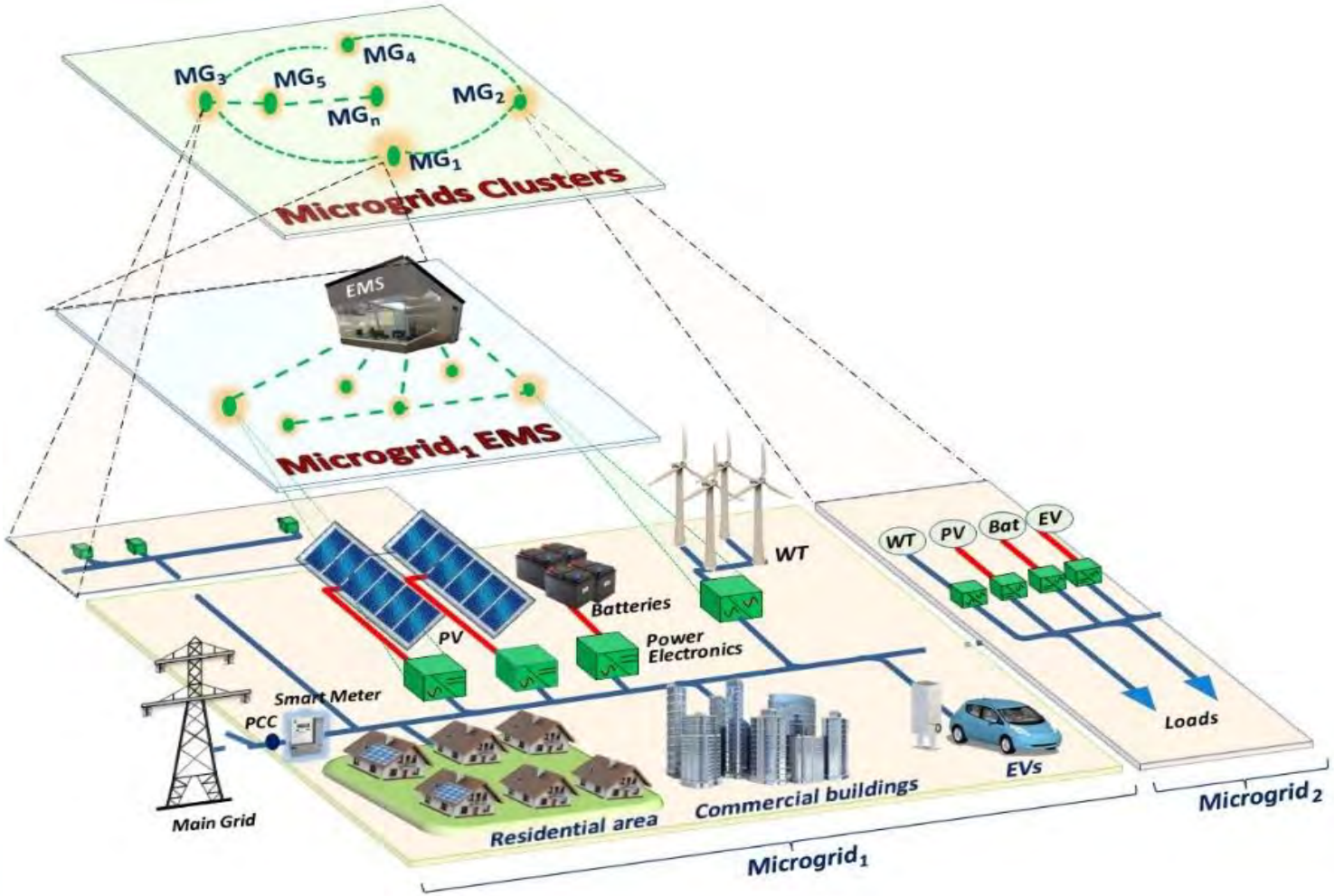

Microgrids RESEARCH PROGRAMME

CLUSTERIZATION

SMART GRID
Self-healing
Demand response
Resiliency
Power quality
Market-enabled
Optimized operation

New knowledge
- Complex systems
- System of System
- Cyber Physical S.
- Resiliency

Transdisciplinary research areas
- Telecom Eng
- Computer Science
- Artificial Intelligence
- Biomimetics

MICROGRIDS
Restricted stability
Limited fault tolerance
Local power quality
Pilots / Narrow market
Automatic operation

Microgrid Research Laboratories

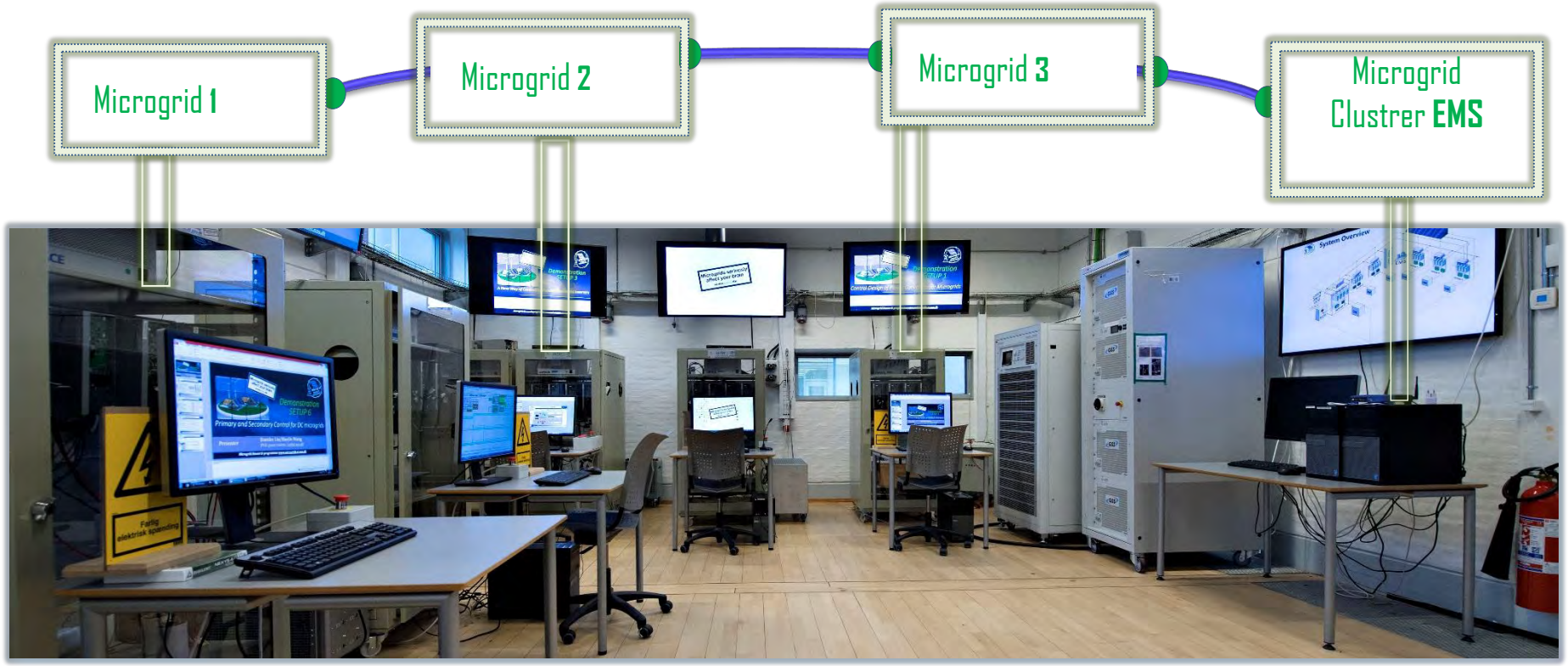

- Multiple Microgrid clusters research

Use Case: Multiple Community Prosumer Microgrids

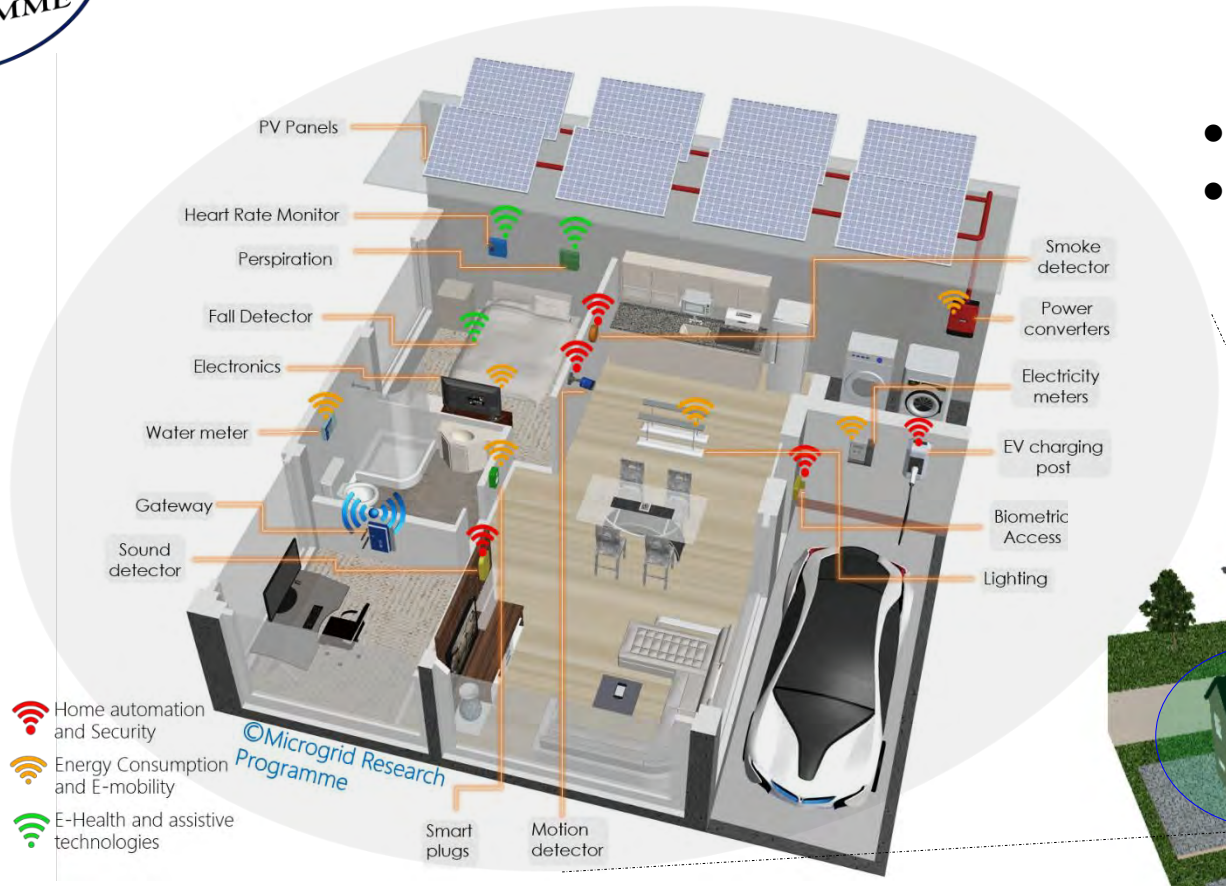

- Prosumer concept
- Energy community

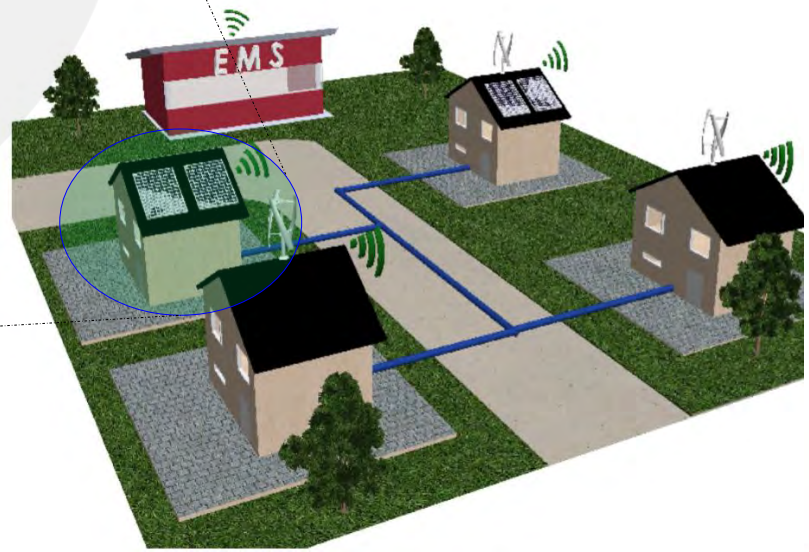

Use Case: DC Rural Electrification - Multinanogrids

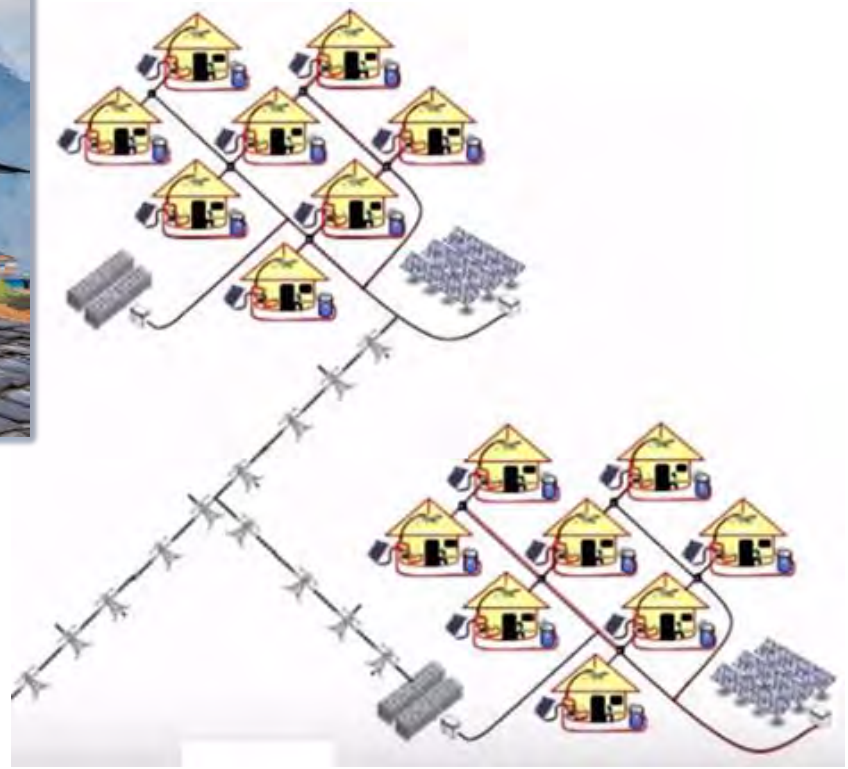

- Rural remote areas: villages, islands
- Resiliency in front of natural disasters

Multiple Microgrid Labs

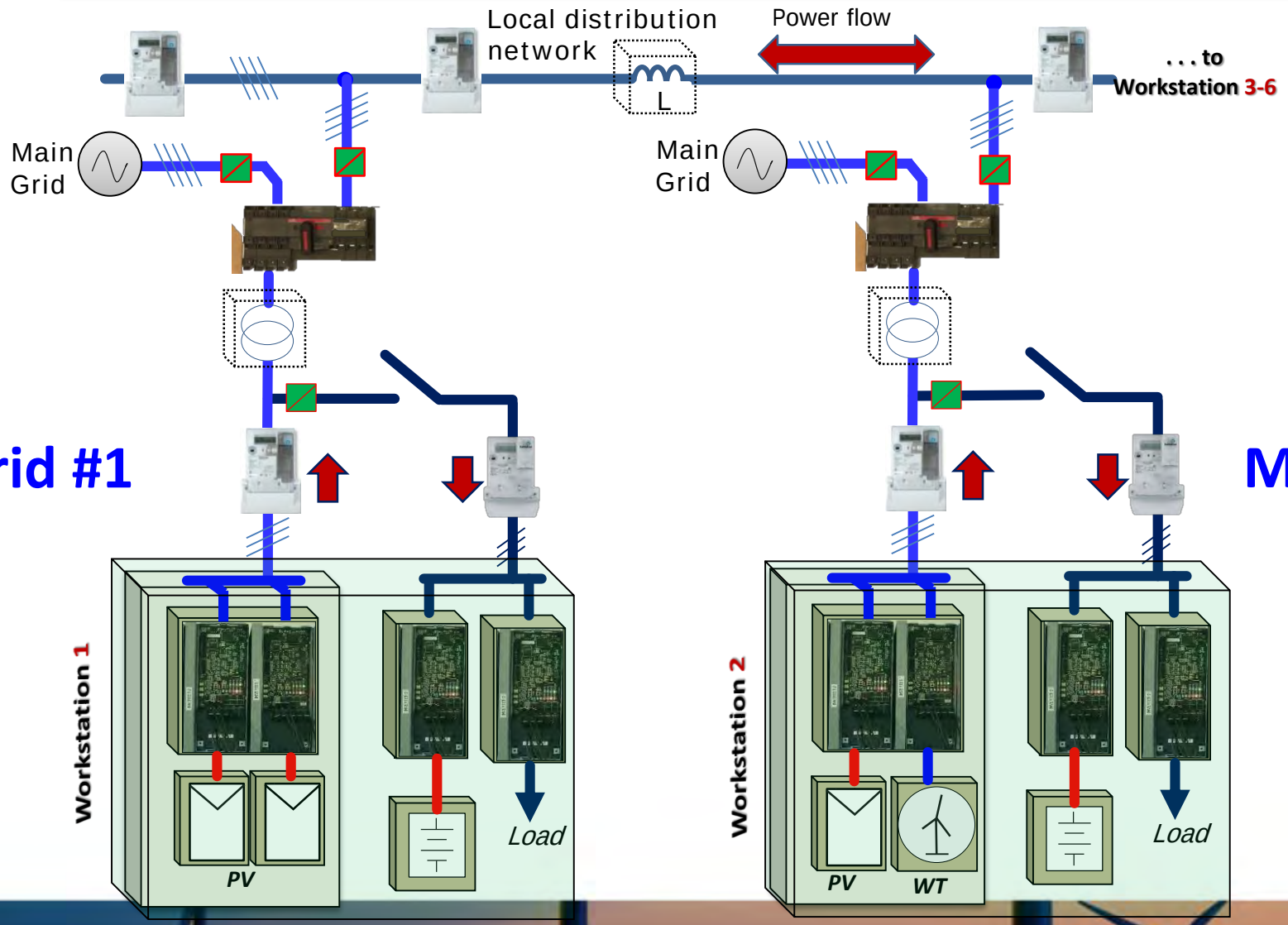

Multi-Microgrid System

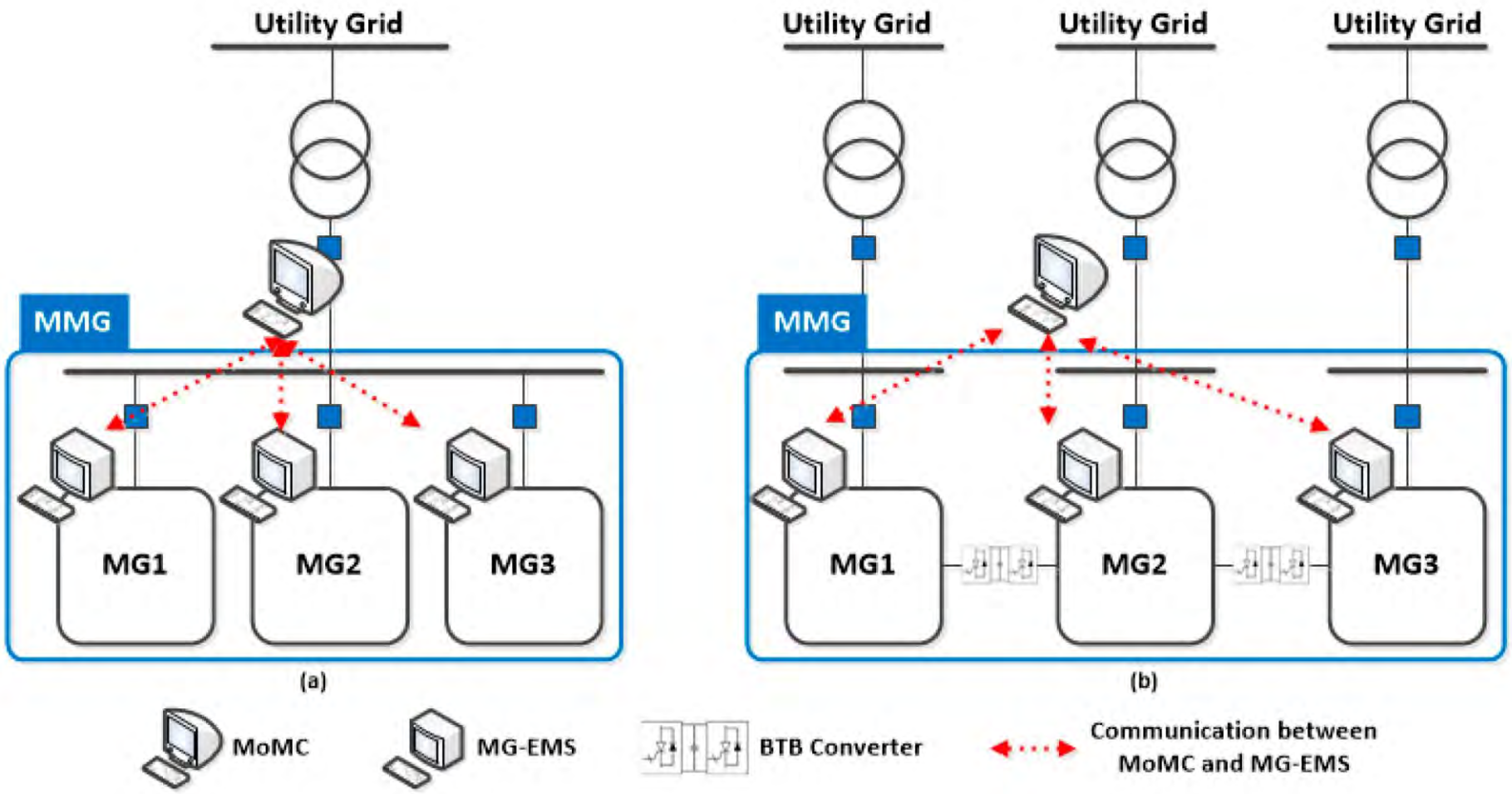

Microgrid Operation

Typical structure of a microgrid

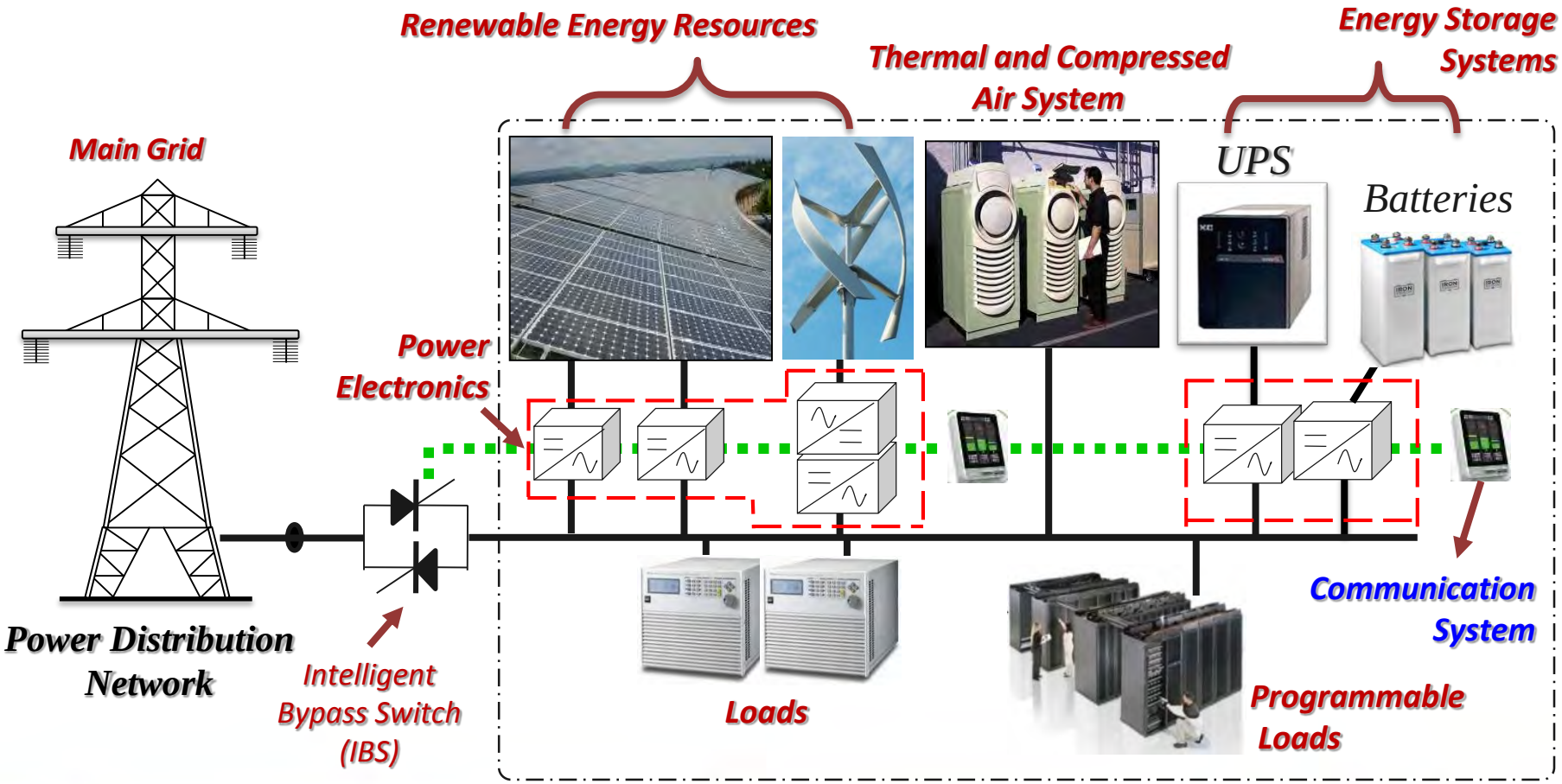

Microgrid Control

Hierarchical Control Principle

- Primary Control: Modeling + Inner loops + droop Control (P/Q Sharing).
- Secondary Control:
  - f/V Restoration (Island) : Set-points assignation from MGCC to the DGs .
  - Synchronization (Island to grid Connected mode)
- Tertiary Control: Power Import/export from/to the grid.

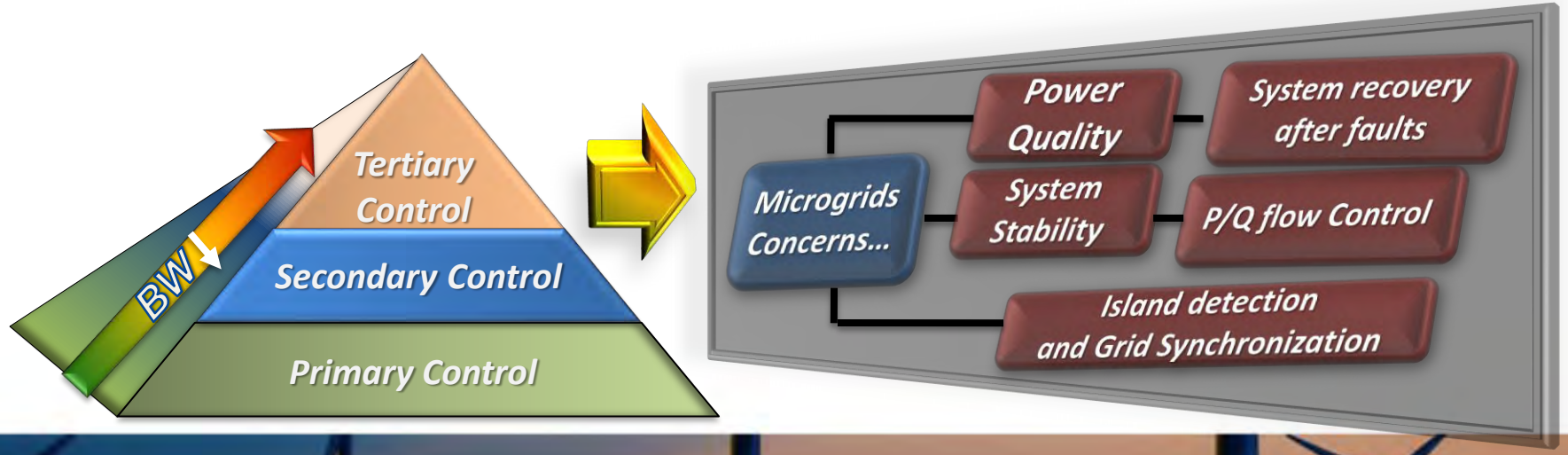

Multiple Microgrid Clusters Control

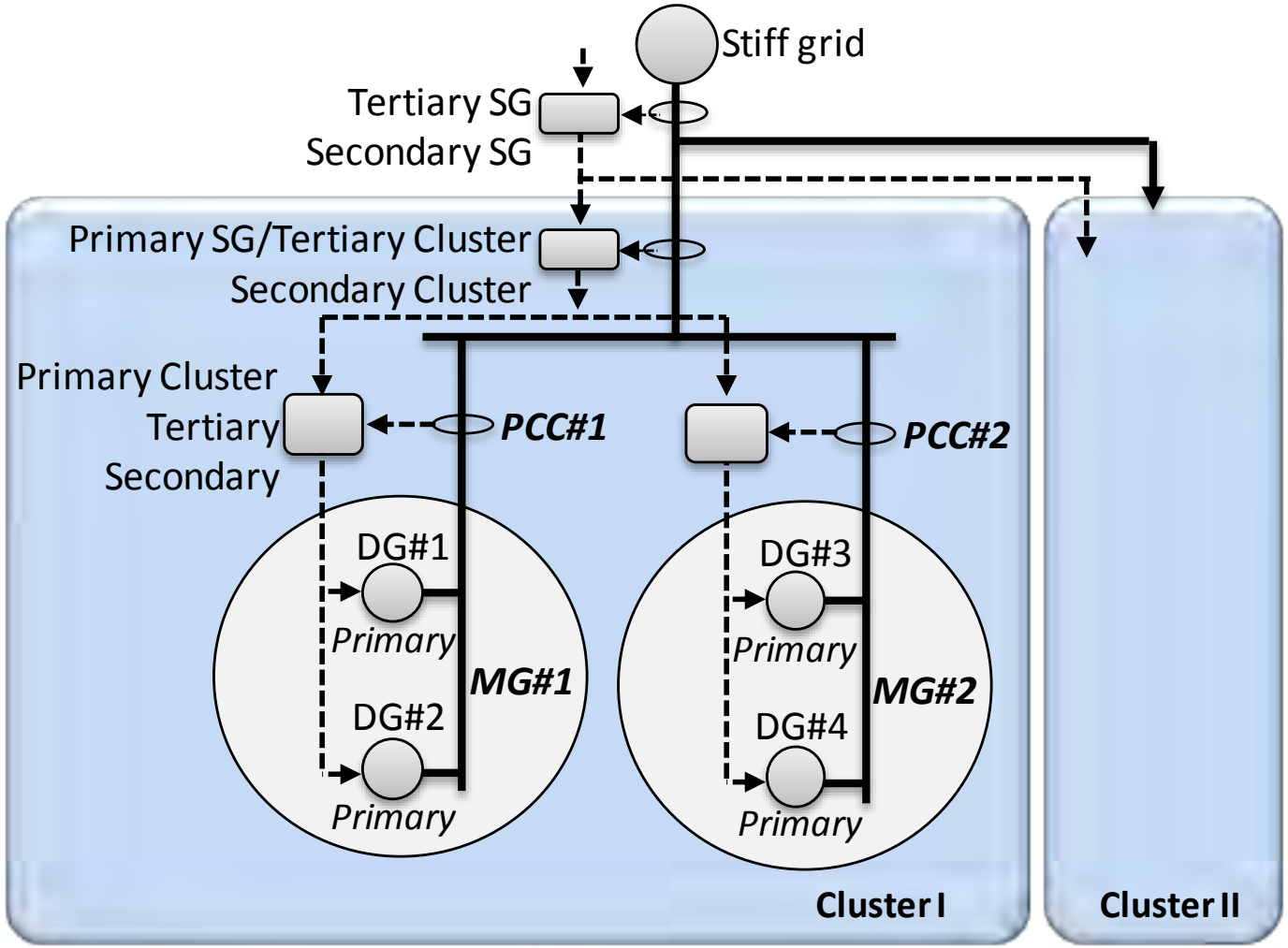

Shipboard Microgrids

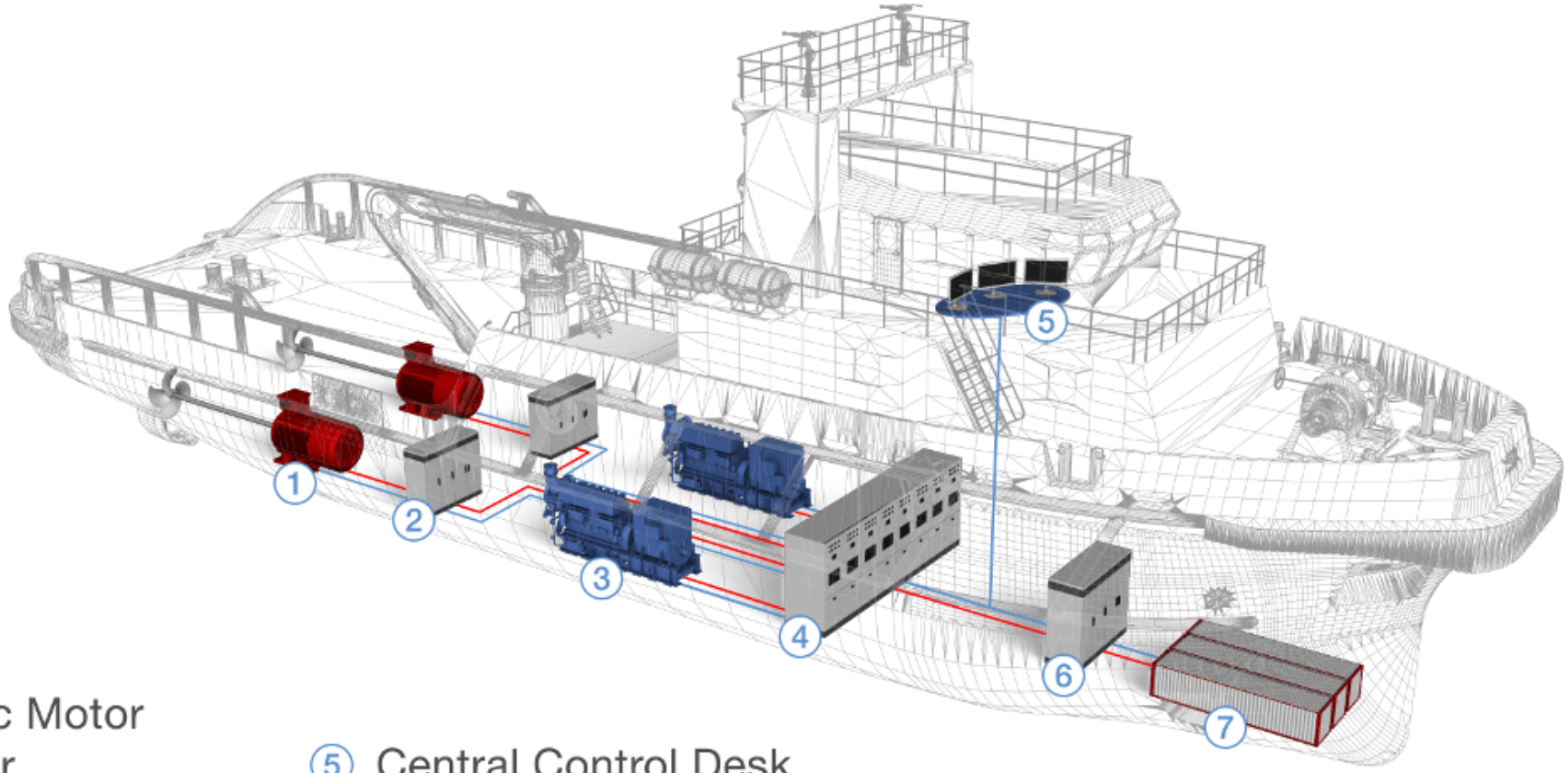

1. Electric Motor
2. Inverter
3. Engine-generator
4. Switchgear
5. Central Control Desk
6. Battery Converter
7. Battery Storage

Source: Typhoon HIL

Shipboard Multi-Microgrids

Notional AC zonal electrical distribution system / IEEE Std 45.3-2015

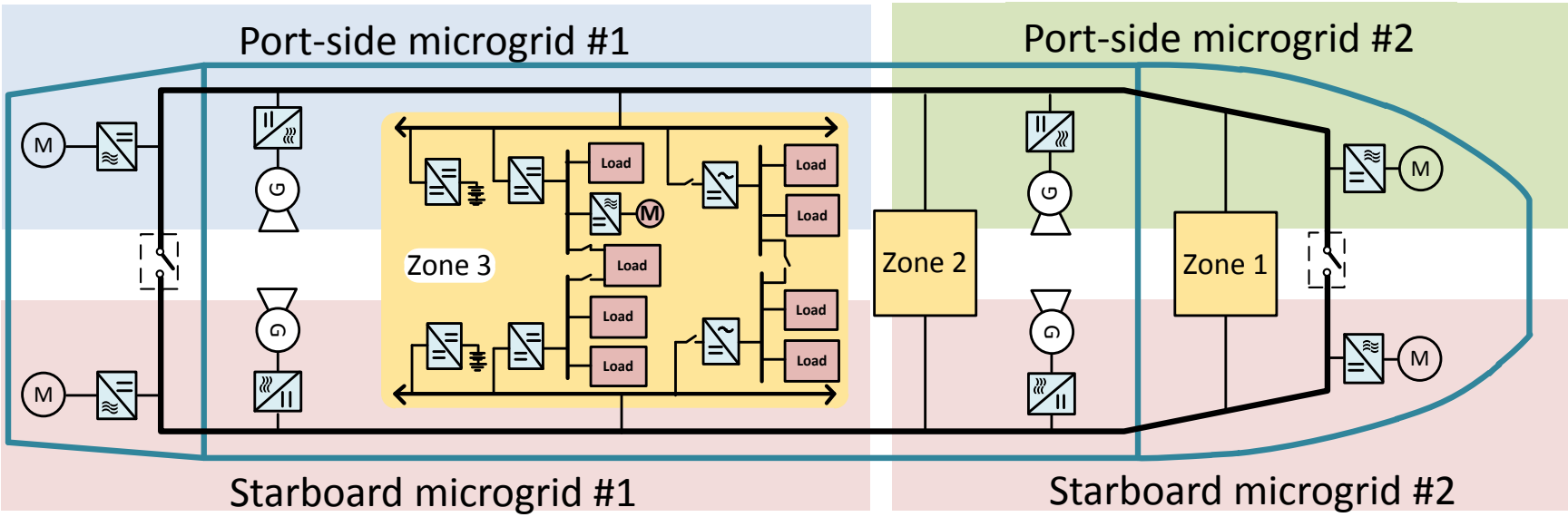

Modern electric ships tend to use zonal electrical distribution system (ZEDS) architecture based IPSs over radial architecture: It is a real **multi-microgrid cluster**

Aircraft Microgrids

More electrical aircraft is here: Boeing 787

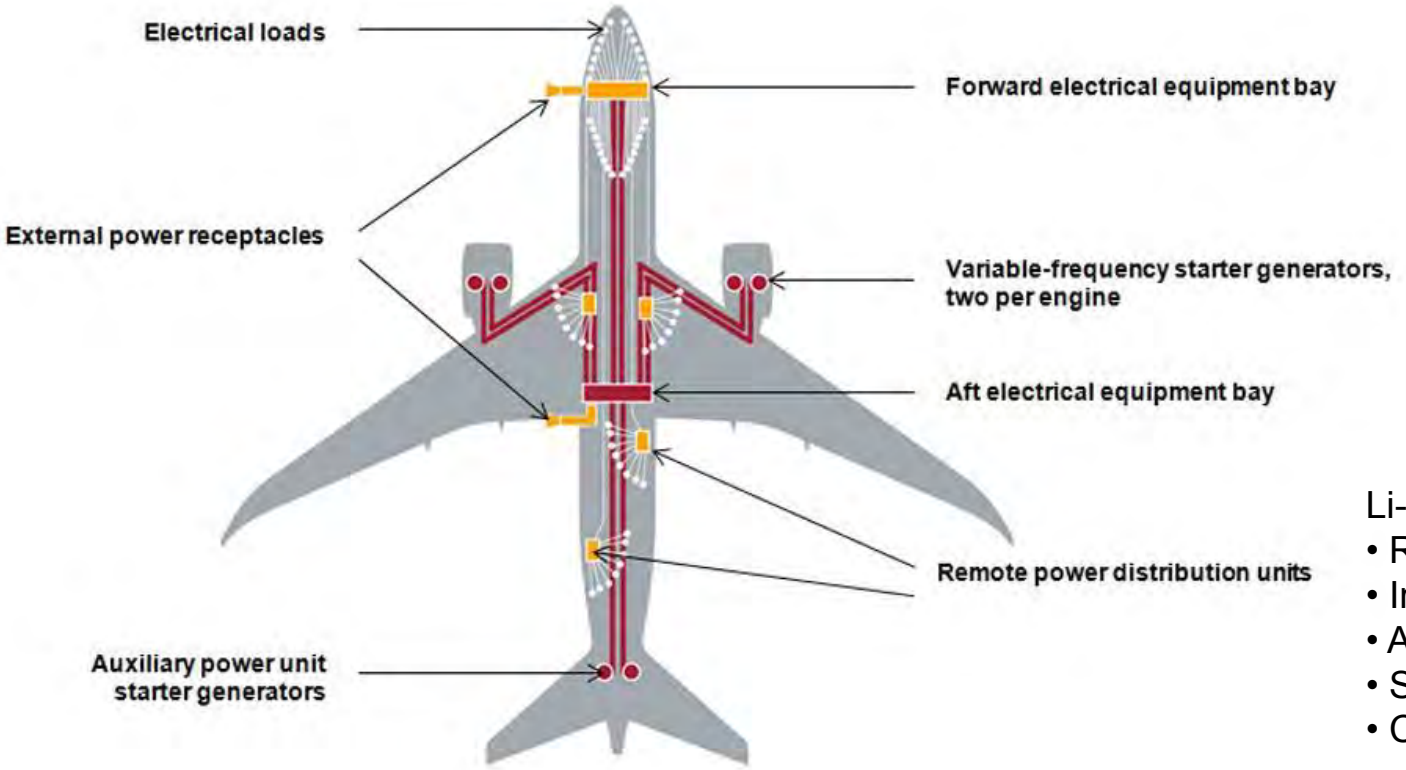

Li-ion batteries key advantages that suit it for modern jet application:

- Required high voltage and high current production
- Improved power quality
- An ability to recharge quickly
- Similar functionality than NiCd batteries, while weighing 30% less
- Compact – about the size of the average car battery

Source: Boeing

Aircraft Hybrid Multi-Microgrids

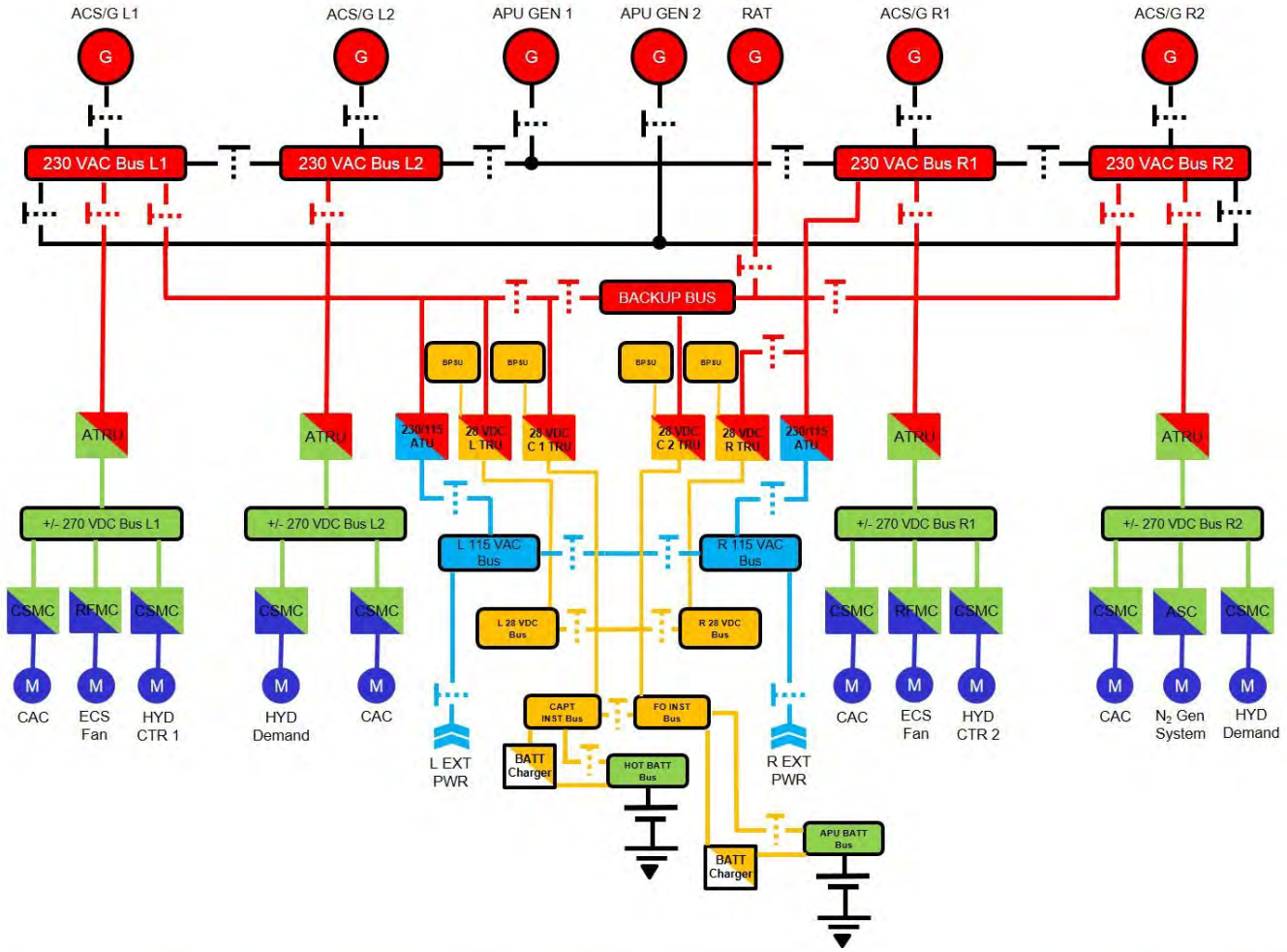

Closed Ecological Systems

Closed ecological systems (CES) are:

- **Isolated** Ecosystems without any matter exchange with outside environment
- Ecosystems rely on recycling and reutilization

Man-made CESs applications:

- Investigating fundamental processes
- Gaining insight into the function of the Earth's biosphere
- Studying interactions of ecosystems
- **Creating space-based life support system for space explorations**

Examples:

- BIO-Plex- NASA Johnson Space Research Center, Houston
- Biosphere 2- Oracle, Arizona
- BIOS 3- Krasnoyarsk, Russia
- CEEF complex- Japan
- **MELiSSA - Barcelona, Spain - ESA**

Biosphere 2, Oracle, Arizona

Source: M. Nelson, NS. Pechurkin, JP. Allen, LA. Somova, JI. Gitelson, "Closed ecological systems, space life support and biospherics," *In Environmental Biotechnology* 2010, pp. 517-565, Humana Press, Totowa, NJ.

Microgrids Concepts in Closed Ecosystems

MELiSSA Pilot Plant (MPP)

Universitat Autònoma de Barcelona

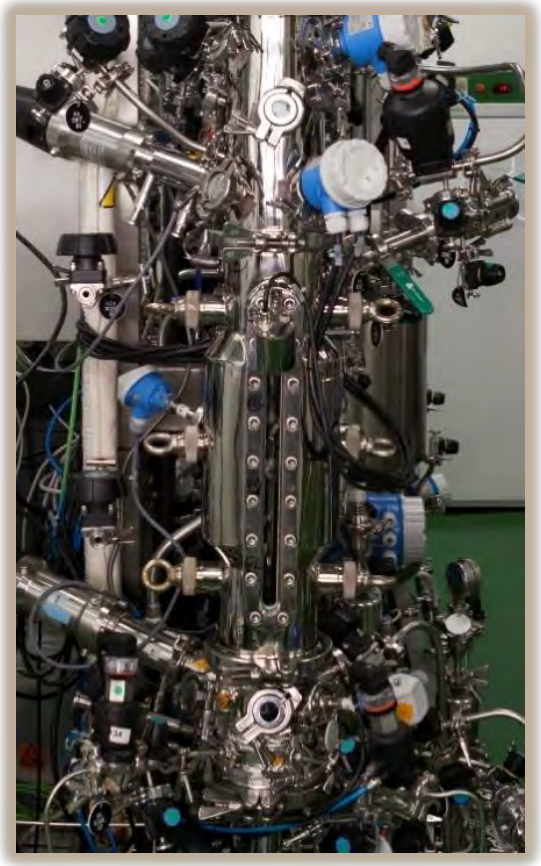

CIII: *Nitrification compartment*

CIVa: *Photobioreactor*

CIVb: *Higher plant compartment*

CV*: Crew compartment*

Parallelism between Closed Ecosystems and Microgrids

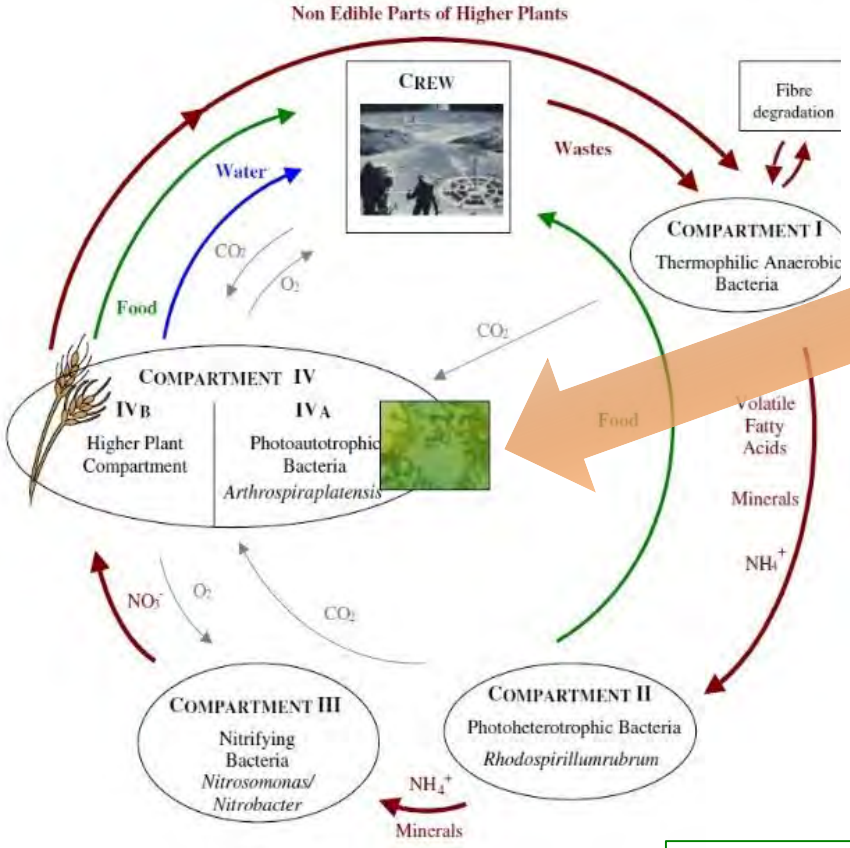

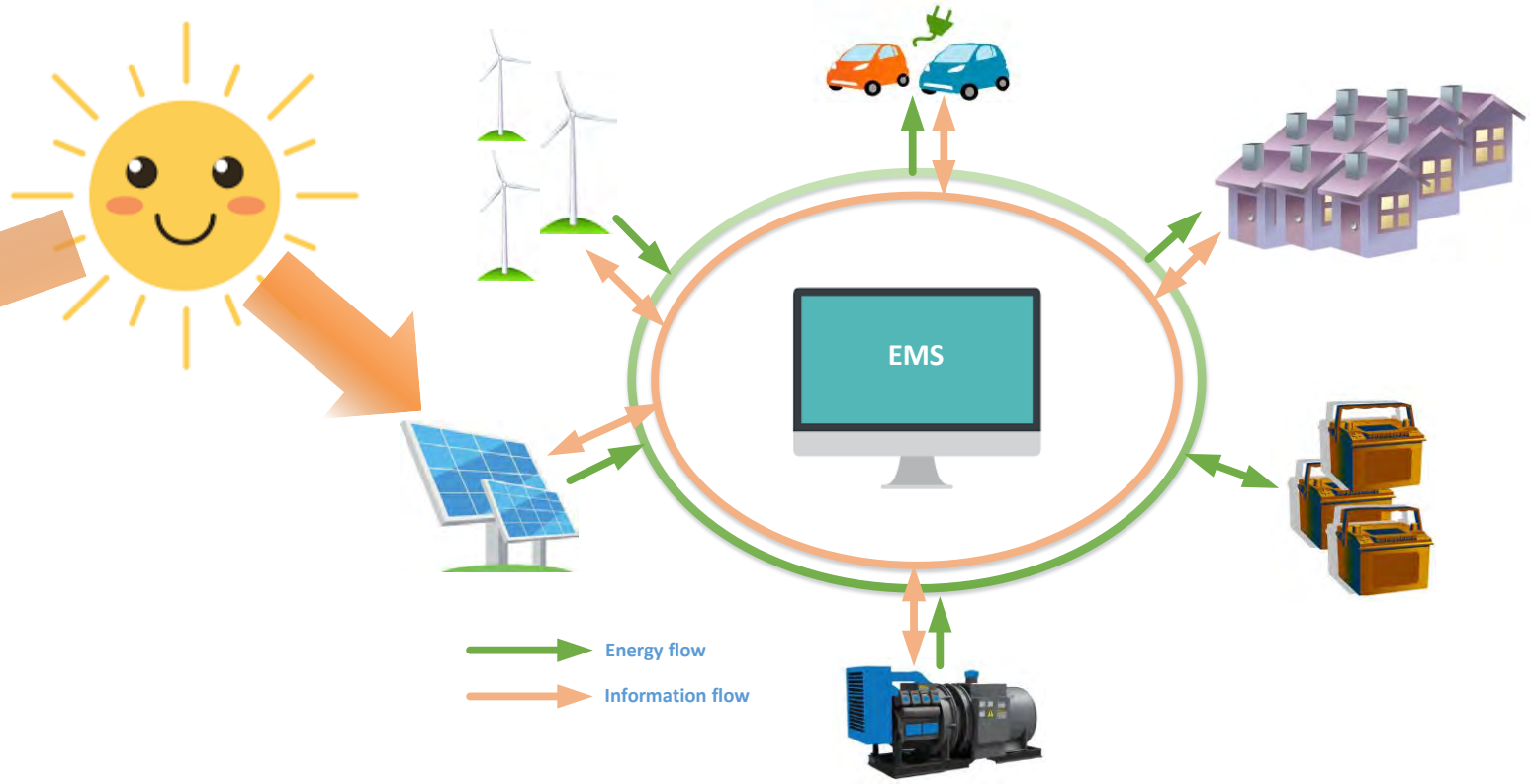

Closed Ecological Systems

- *Photosynthesis*
- *O2 storage*
- *Microbial fuelcell*

- *Photovoltaics*
- *Energy storage*
- *Hydrogen fuel cell*

Microgrids

Multi-level hierarchical control structure of MGs and CESs

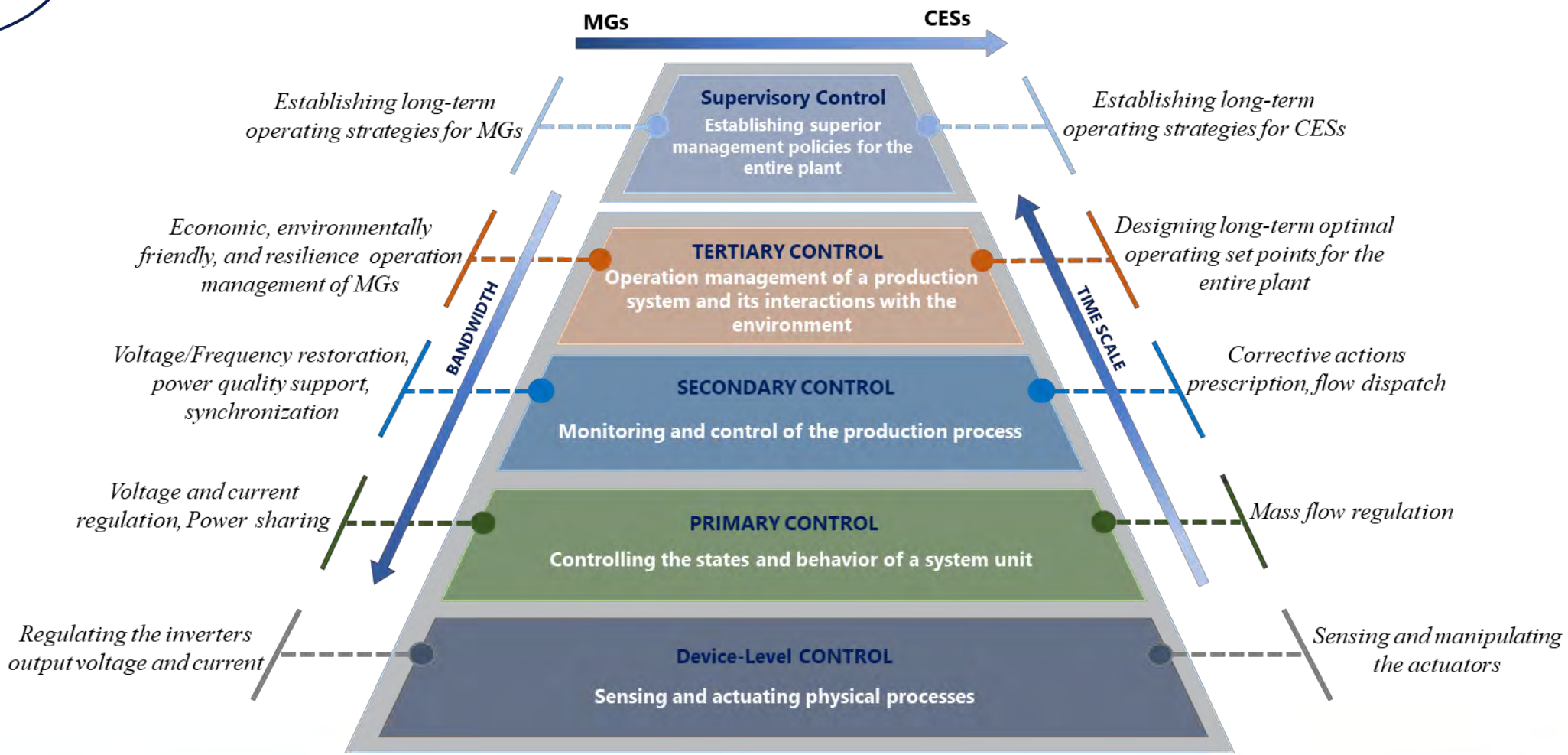

Microgrids seriously affect your brain
www.aau.dk

THANK YOU!

For contact/cooperation:
Josep M. Guerrero joz@et.aau.dk
www.crom.et.aau.dk