ARPA-E's Fusion Capability Teams

arpa·e

Theory, Modeling, and Validation for a Range of Innovative Fusion Concepts Using High-Fidelity Moment-Kinetic Models

Virginia Tech & Princeton Plasma Physics Laboratory

Fluid and kinetic plasma modeling supporting mirrors (examples shown below), pulsed concepts, and plasma-wall (solid and liquid) interactions for innovative fusion concepts, along with validation experiments for liquid-metal wall dynamics

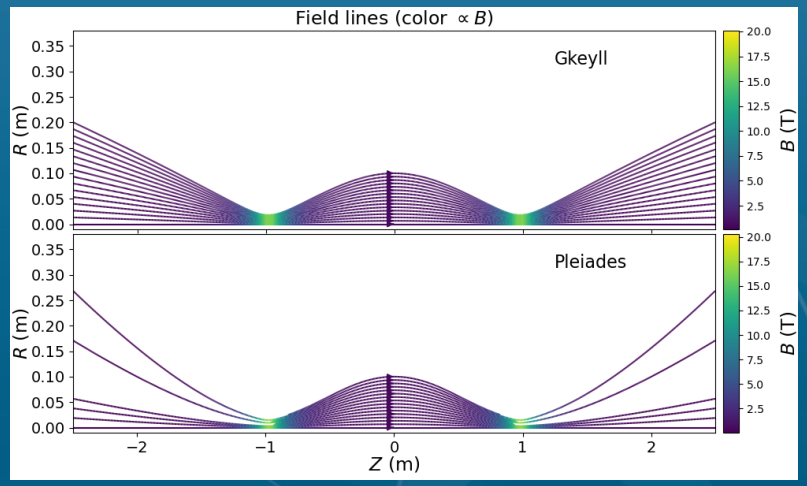

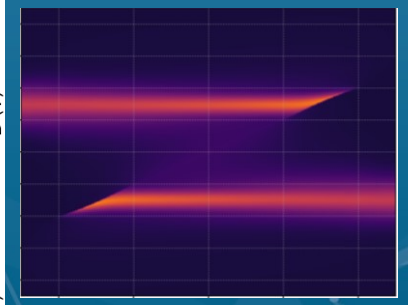

Contact(s)	PI: **Prof. Bhuvana Srinivasan,** srinbhu@vt.edu
Key references/ links	https://www.aoe.vt.edu/people/faculty/srinivasan.html https://www.aoe.vt.edu/people/faculty/adams.html https://www.aoe.vt.edu/people/faculty/brizzolara.html https://gkeyll.readthedocs.io/en/latest/

Key Properties	
Physical models used	- Multi-moment, multi-fluid models for plasma modeling, including coupled incompressible/compressible fluid models - Fully kinetic and gyrokinetic models for plasma equilibrium and dynamics
Codes	- Gkeyll (PPPL code developed collaboratively with a number of academic partners) - In house incompressible/compressible research code
Fusion concepts/types that can be modeled	- MCF (e.g., mirrors, field-reversed configurations, Z-pinches, spheromaks) - MIF (e.g., plasma-jet-driven MIF) - Plasma-wall (solid and liquid wall) interactions for a variety of fusion concepts
Key physical processes that can be modeled	- Plasma equilibrium and dynamics - Turbulent transport and collisional phenomena - Plasma shock formation and dynamics (fluid and kinetic) - Plasma-wall interactions with solid (absorbing, reflecting, and electron emitting) walls, and with liquid metal wall dynamics
2D, 3D ?	- 3D fluids - 6D kinetics
Meshing details	Eulerian meshes with mapped mesh capability for body-fitted grids
Boundary conditions	A suite of boundary conditions can be used depending on the fusion concept being study (periodic, walls, conductors, insulators, electron emitting boundaries, etc.)
Other	The team is performing in-house validation experiments to study liquid-metal response to large current pulses

arpa·e

Data-enabled Fusion Technology (DeFT) - Austin, TX

Sapientai

Sapientai LLC, General Fusion, UT (Austin)

- Machine Learning/AI Applied to Fusion
- Anomaly Detection, Optimization, Analysis

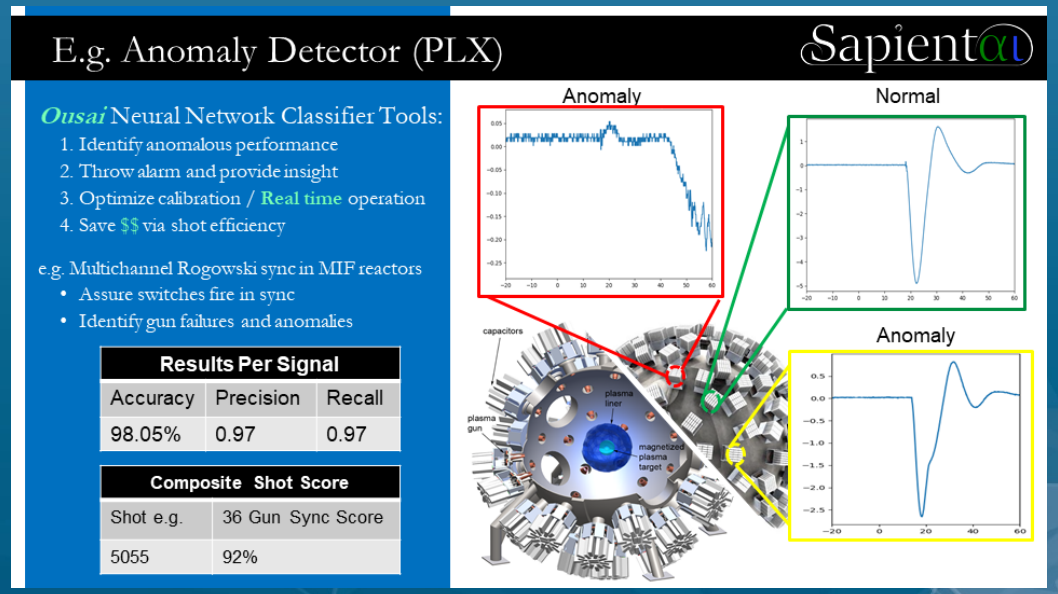

Contacts	**Craig Michoski,** michoski@sapient-a-i.com **David R. Hatch,** drhatch@austin.utexas.edu
Key references/links	https://sapient-a-i.com/

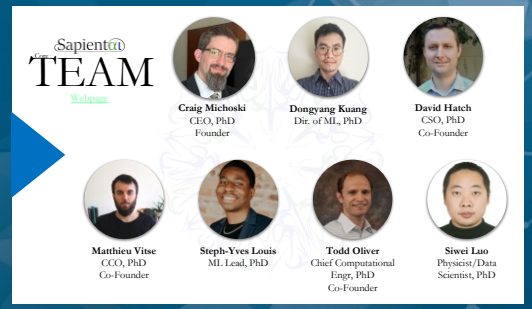

Key Capabilities	
Physical models used	Model discovery, model extraction, system identification, model enhancement, e.g., reduced models, gyrofluids, MHD, gyrokinetics, electrostatics, electrodynamics, full kinetics, physics constrained, structural mechanics, etc.
Codes	The Ousai platform allows rapid prototyping of highly customized, state-of-the-art solutions to the specific needs of the customer
Fusion concepts/types that can be modeled	Magneto-inertial fusion, magnetic fusion, fluid, general plasma, electrical, mechanical, inline processing subsystems, etc., e.g,. anomaly detection, performance optimization, system identification of fusion subsystems, such as from spectrometers, interferometers, derived diagnostics, etc.
Key physical processes that can be optimized	**Any physical process** that can be measured or simulated can be modeled / predicted / enhanced by Ousai, and made first-principles consistent, e.g., diagnostics, control parameters, output quantities of interest, derived features, etc.
n-dimensional models	We use machine learning to model *n*-dimensional systems
Computational efficiency	Ousai is capable of finding fast, efficient, and highly accurate solutions that can run in real time on desktop and laptop computers
Boundary conditions	Unlike forward simulation models, which are constrained to physically idealized and simplified BCs, Ousai can incorporate / predict observation data directly into its modeling space / workflow
Other considerations	Ousai is a highly flexible, highly practical, prediction and analysis platform for rapid and deep examination of experimental and/or simulation-based data

arpa·e

Doppler-Free Saturation Spectroscopy (DFSS) - Oak Ridge, TN

Oak Ridge National Laboratory

Non-invasive 2D map of magnetic-field vector via Zeeman splitting of H_α/D_α spectra.

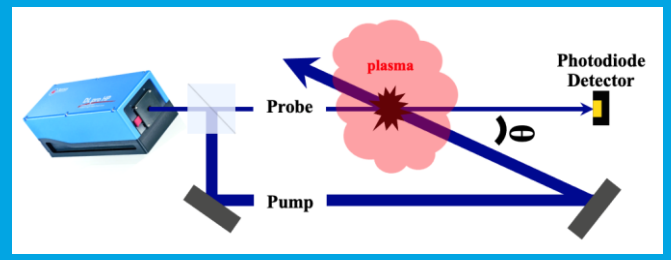

Counter propagating probe/pump beams provides extreme spectral resolution via suppression of Doppler broadening.

Laser and Controller

Contact(s)	**Elijah Martin**, martineh@ornl.gov
Key References/Links	Rev. Sci. Instrum. **87**, 11E402 (2016); https://doi.org/10.1063/1.4961287

Key Properties	
Physical Property to be Measured	Magnetic-field vector
Technique	Systematic analysis of spectra data obtained using DFSS
Plasma parameter range	n_e between 1e16 m^{-3} and 1e22 m^{-3} Atomic H/D neutral density between 1e10 m^{-3} and 1e16 m^{-3} $\lvert B\rvert \geq 50$ Gauss (no upper limit)
Resolution (time)	Local: 5 to 10 ms 2D Map: 0.5 to 2 seconds
Resolution (space)	1 to 3 mm perpendicular to laser beam 10 to 20 mm parallel to laser beam
Interface	Two optical window ports sharing unobstructed sightline. Window clear aperture diameter of 0.5 to 3 inches, depending on desired 2D measurement geometry.
Suitable for MCF, ICF, MIF?	MCF
Form factor: transport	Air-ride truck
Form factor: operation	3'x6' optical table, 19" equipment rack, x2 mobile 2'x2' tables
Set-up time	3–5 days
Minimum time for a measurement	5 to 10 ms (set by maximum wavelength scan frequency of laser). A sub-5 ms measurement time can be achieved by accumulating data over multiple shots.
Other characteristics	2D Map is obtained by sweeping measurement location using piezo-driven mirror. Sweep pattern programmable.

arpa·e

Soft X-ray, EUV spectroscopy, Neutron, & Fast-Imaging Diagnostics - Los Alamos, NM

Los Alamos NATIONAL LABORATORY | NNSA National Nuclear Security Administration | University of Nevada, Reno 1874

A variety of proven soft x-ray, neutron, EUV flux and spectroscopic measurements, along with fast imaging

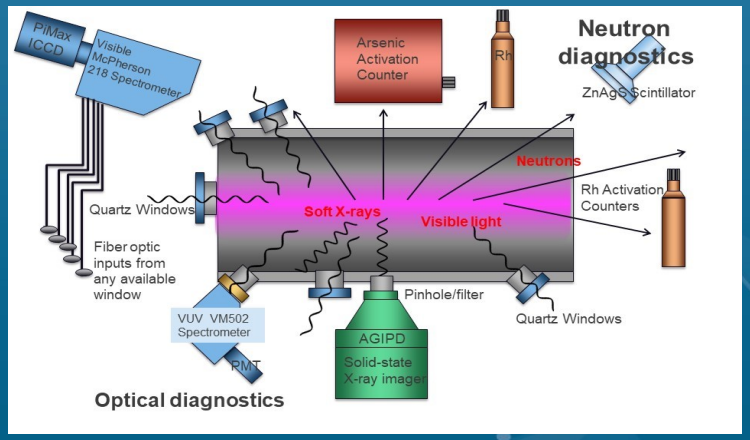

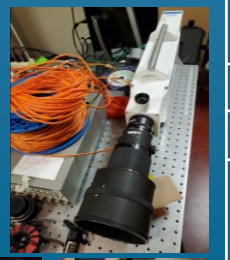

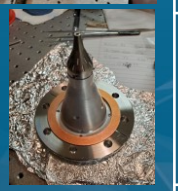

Contact(s)	**Glen Wurden**, wurden@lanl.gov **Bruno Bauer**, bbauer@physics.unr.edu
Key References/Links	G. C. Idzorek, W. L. Coulter, P. J. Walsh, and R. R. Montoya, "**Soft x-ray diagnostics for pulsed power machines**," LA-UR-95-2336; CONF-950750-18, Aug. 1995. https://www.osti.gov/biblio/102382. G. A. Wurden and S. K. Coffey, "**A multi-frame soft x-ray pinhole imaging diagnostic for single-shot applications**," *Rev. Sci. Instrum.* **83**, 10E516 (2012), https://doi.org/10.1063/1.4733536. R. E. Chrien, **Neutron calibration for the FRX-C/LSM magnetic compression experiment**, *Rev. Sci. Instrum.* ***62****, 1489 (1991),* https://doi.org/10.1063/1.1142473.

Key Properties	
Physical Property to be Measured	X-rays, neutrons, visible and extreme ultraviolet emission from plasmas. Dynamic evolution (imaging).
Technique	Spectroscopy, fast imaging, filtered PMT's and photodiodes, neutron activation (arsenic and rhodium)
Plasma parameter range	10^{13}-cm^{-3} electron density or higher. 10^5 neutrons/pulse or higher. 100-eV electron temperature or higher
Resolution (time)	Seconds to nanoseconds (flux dependent), or time-integrated
Resolution (space)	Depends on sightline, geometry, and/or pinhole diameter
Resolution (energy)	For x-rays, depends on choice of filter sets. Aluminum, Titanium, Nickel, Beryllium. From 10 eV to 10 keV. Ratios of x-ray measurement for electron temperature estimates.
Interface	50-ohm outputs to digitizers, 100-MHz preamplifiers. 12–16-bit dynamic range. Hardened to allow microamp level signal detection in the face of pulsed power noise backgrounds. Vacuum flange access required for x-ray and EUV, and pump-out protection for micron thick metal/plastic foils.
Suitable for MCF, ICF, MIF?	Yes
Form factor: transport	Various / LANL shipment
Form factor: operation	Works with user data acquisition systems, although cameras come with stand-alone control computer (ethernet or USB)
Set-up time	Appropriate vacuum access and mechanical interface is the limiting factor for EUV and x-rays. Neutron detectors stand alone. Shielding of low level signal lines and preamps is essential.
Minimum time for a measurement	Two weeks, once it arrives at your facility. Data available on each pulse
Other characteristics	Best used with other measurements (visible, density, magnetics)
Special considerations	Motion of the plasma, or plasma contamination and/or destruction of foils can be a complicating issue.

arpa·e

Radio-Frequency Scenario Modeling for Fusion Concepts

MIT, ORNL, and LLNL

Leveraging SciDAC developed tools to model RF actuators in fusion devices

Ion cyclotron wave trajectories in a mirror device launched above the 3rd harmonic.

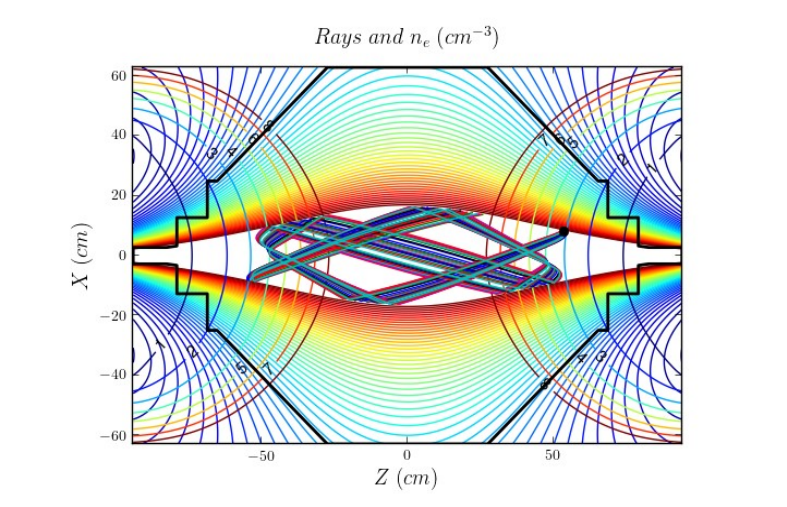

Contact(s)	**John C. Wright,** jcwright@mit.edu
Key References/Links	http://www.compxco.com/stella.html https://bitbucket.org/lcarbajal/prometheus-upgrade/src/master/ https://github.com/compxco/genray https://github.com/ORNL-Fusion/aorsa

Key Properties	
Physical Property to be Modeled	Electron and Ion cyclotron RF heating and synergy with neutral beams and their effect of fusion yield.
Technique	Monte-Carlo and continuous Fokker-Planck along with ray tracing and full-wave codes.
Plasma parameter range	1D, 2D models which can accommodate a very wide range in plasma conditions from exploratory to fusion relevant
Resolution (time)	RF phenomenon: sub-microsecond; plasma response: millisecond
Resolution (space)	~1 mm for ECH waves, ~1 cm for heating profiles
Resolution (energy)	~1 keV for ion and electron distributions
Interface	GUI and commandline.
Suitable for MCF, ICF, MIF?	MCF
Form factor: operation	Executes on desktops and HPC.
Set-up time	~1 week to define a scenario
Minimum time for a measurement	Execution time ~30 min or less for most work flows
Special considerations	As a predictive tool, parametric scans are generally needed.

arpa·e

A Simulation Capability Team for Innovative Fusion Concepts - Rochester, NY

University of Rochester

Laboratory for Laser Energetics

A theory/modeling research team at the University of Rochester to provide multi-physics simulation support for fusion concept teams

FLASH

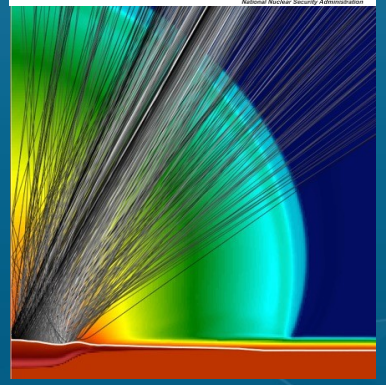

TriForce

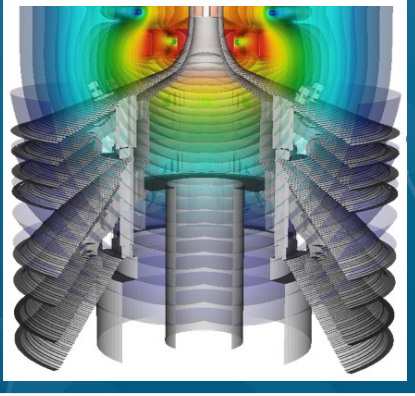

OSIRIS

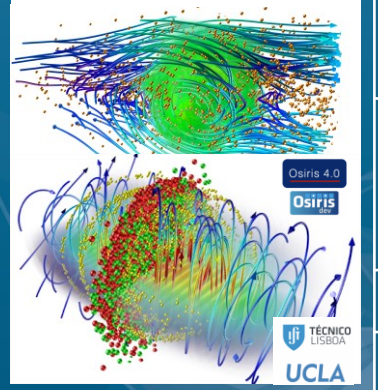

Contact(s)	**Petros Tzeferacos,** p.tzeferacos@rochester.edu **Steven Stagnitto,** ssta@lle.rochester.edu
Key References/Links	https://www.lle.rochester.edu http://flash.uchicago.edu https://hajim.rochester.edu/me/sites/sefkow/about/index.html https://picksc.idre.ucla.edu

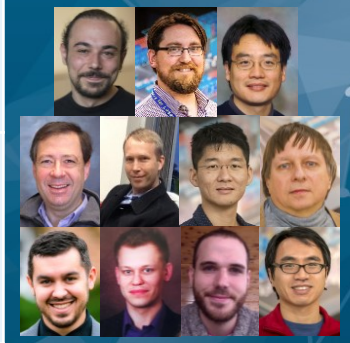

Key Properties

Physical models used	**Fluid, hybrid, and kinetic simulations** **FLASH** is a finite-volume Eulerian, radiation extended-MHD code with extensive HEDP capabilities. **TriForce** is a C++ framework for open-source, parallel, multi-physics, 3D, particle-based hybrid fluid-kinetic simulations. **OSIRIS** is a massively parallel, fully relativistic PIC code with binary collisions and a QED module.
Codes	**FLASH, TriForce, OSIRIS**
Fusion concepts/types that can be modeled	MIF, ICF, MCF, with an emphasis on laser-driven and pulsed-power-driven plasma and fusion experiments.
Key physical processes that can be modeled	Multi-temperature hydro & MHD, SPH, EM-PIC, heat exchange & transport (local/non-local), radiation transport, laser deposition, extended MHD (full Braginskii), multi-material EoS and opacities, material properties, nuclear physics, burn, gravity, self-gravity, EM solvers, current circuit, QED, synthetic diagnostics.
Dimensionality	1D, 2D, 3D simulations in multiple geometries.
Meshing details	**FLASH:** Block-structured (oct-tree) adaptive mesh refinement (AMR) and uniform grids. **TriForce:** Meshless approach for fluid dynamics and Lagrangian particle-based description – integration of nonpolar geodesic polyhedral, as well as rectangular and triangular AMR. **OSIRIS:** EM-solves on a Cartesian mesh with advanced dynamic load balancing.
Other considerations	All three codes are high-performance computing (HPC) codes that scale well on > 100,000 cores, on modern architectures. This is achieved through MPI, threading, vector parallelism, and GPU accelerators to optimally utilize compute resources.

A Portable Thomson Scattering System to Measure Plasma Density and Temperature

Lawrence Livermore National Laboratory | UC San Diego

We use optical Thomson scattering to probe n_e, T_e, or T_i at several locations along the plasma depending on the fusion concept team's interests. A 1.5-ns, 532-nm, 8-J laser is used as a probe, and scattered light spectrum is measured by two spectrometers coupled to ns-gated CMOS cameras.

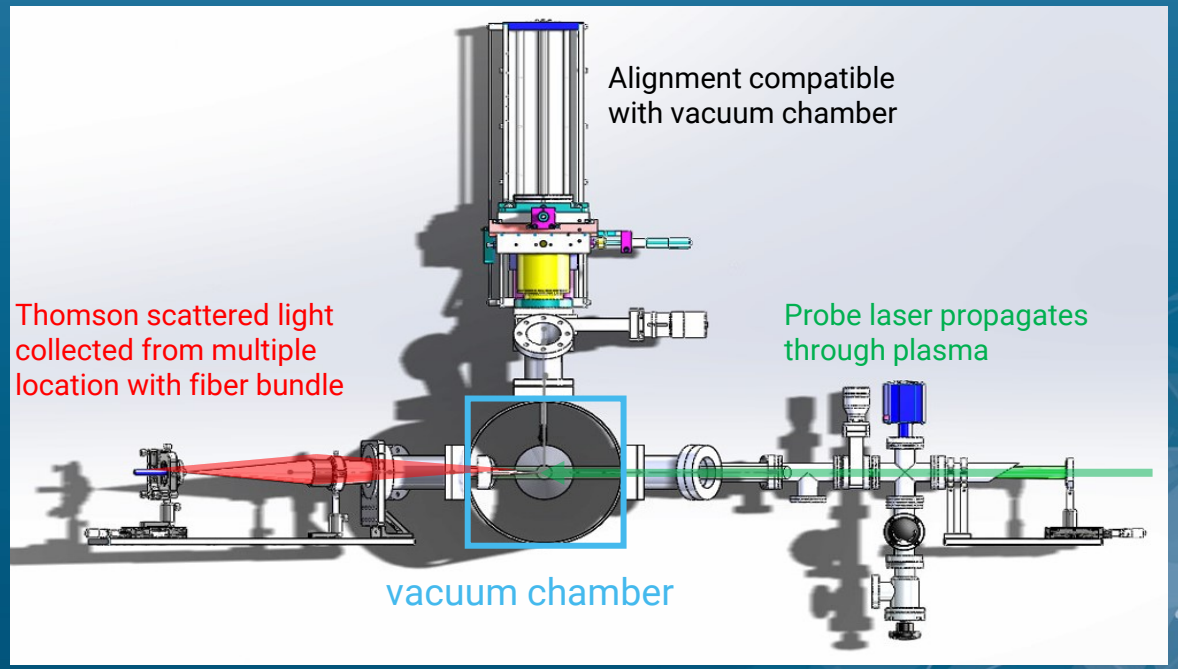

Contacts	**Clément Goyon**, LLNL, *goyon1@llnl.gov* **S. Bott-Suzuki**, UCSD, *sbottsuzuki@ucsd.edu*
Key Reference	*"Plasma Scattering of Electromagnetic Radiation"* Froula, D. H., et al. Academic Press. 2011

Key Properties

Physical Property to be Measured	Electron density (n_e), electron temperature (T_e), ion temperature (T_i), and flow velocity
Technique	Spectrally resolved Thomson scattering of laser probe inside plasma
Plasma parameter range	n_e>10^{17}cm^{-3} and T_e, T_i > 10 eV
Time Resolution	Nanosecond resolution
Spatial Resolution	up to 22 signals each from a localized volume (<mm^3) inside plasma
Spectral resolution	0.09 nm for electron parameters and 0.03 nm for ion parameters
Suitable for MCF, ICF, MIF?	MIF and ICF
Set-up time	2-3 weeks
Minimum time for a measurement	2 weeks to first data
Other characteristics	Thomson scattering is the gold standard for plasma temperature and density measurements
Requirements	2 optical windows for laser input port and optical collection

arpa·e

Portable & Adaptable Neutron Diagnostics for ARPA-E (PANDA)

Lawrence Livermore National Laboratory & University of California, Berkeley

Calibrated *neutron yield* measurement & *thermonuclear fusion* verification

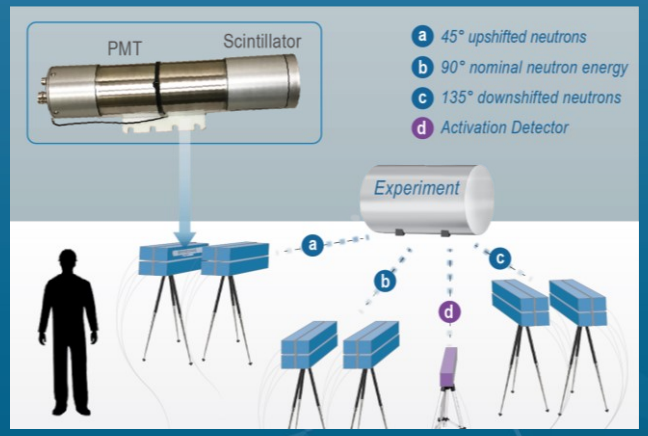

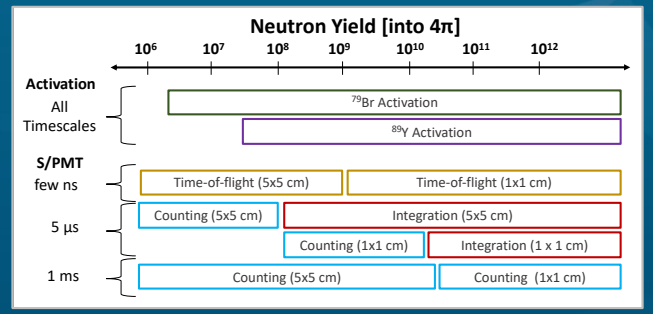

Contact(s)	**Drew P. Higginson**, LLNL PI higginson2@llnl.gov **Bethany Goldblum**, UCB PI bethany@berkeley.edu

Key Properties

Calibrated neutron yields	
Measurement	Measurement of total neutron yield from calibrated $LaBr_3$ detectors
Technique	Neutron yield via ^{79}Br and ^{89}Y activation. Automated yields provided in <2 minutes.
Minimum yield	Provide accurate yields at 5e6 total neutrons at 20 cm (fluence = 1e3/cm^2).
Thermonuclear fusion verification	
Measurement	Neutron energy resolution to demonstrate thermonuclear fusion and rule out instability generation. Up to 24x independent plastic scintillators coupled to PMTs.
Technique	*<100-ns neutron pulse:* time-of-flight method at different distances and angles allows for recovery of neutron energy *>1-µs neutron pulse:* neutron pulse-integral histogram used to infer neutron energy spectra
Minimum yield	Measurements possible at neutron yields as low at 1e5 (see left panel).
Small form factor, fast set-up time, and expert simulations	
Suitability	Suitable for MCF, ICF, MIF. Any pulse duration, wherever neutrons are produced > 1e5.
Form factor	Under 10-sq-ft footprint.
Set-up time	Diagnostics can be shipped and ready for data collection in ~2 weeks.
Simulation Support	Expert Monte-Carlo simulation (GEANT, MCNP) support to understand neutron environment.

arpa·e

Neutron Diagnostics, Laboratory for Laser Energetics - Rochester, NY

LLE, University of Rochester

Three plastic scintillator based neutron detectors: 7x4, Large, Fast for increasing yields, Fast can determine neutron-averaged ion temperature.

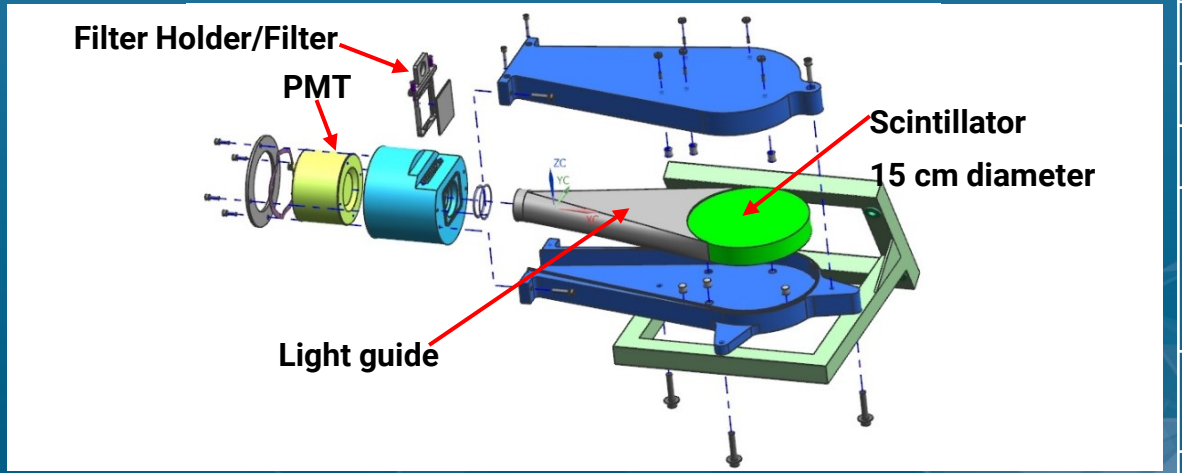

Contact(s)	Jonathan Davies, jdav@lle.rochester.edu Chad Forrest, cforrest@lle.rochester.edu
Key References/Links	https://doi.org/10.1063/1.1788875 https://doi.org/10.1063/1.5090785

Key Properties	
Physical Property to be Measured	Neutron yield and neutron-averaged ion temperature
Technique	Scintillation
Plasma parameter range	> 10^2 incident neutrons, >10^4 for ion-temperature measurements
Resolution (time)	0.1 ns
Resolution (space)	None
Resolution (energy)	0.1 keV
Interface	Data can be recorded from an oscilloscope 8-channel scope available
Suitable for MCF, ICF, MIF?	Any
Form factor: transport	Ships in Pelican cases 31.28 x 24.21 x 17.48 in
Form factor: operation	Detector(s) plus cables to digitizer, scope and HV supply
Set-up time	2+ hours
Minimum time for a measurement	Single shot
Other characteristics	Active areas: 7x4 248 cm^2, Large 177 cm^2, Fast 100 cm^2
Special considerations	Mounting the responsibility of the concept team

arpa·e

Ultrashort Pulse Reflectometer – Davis, CA

University of California at Davis

- Portable pulsed radar system for density profile measurement
- Measures time-of-flight at 48 frequencies every 3 μsec

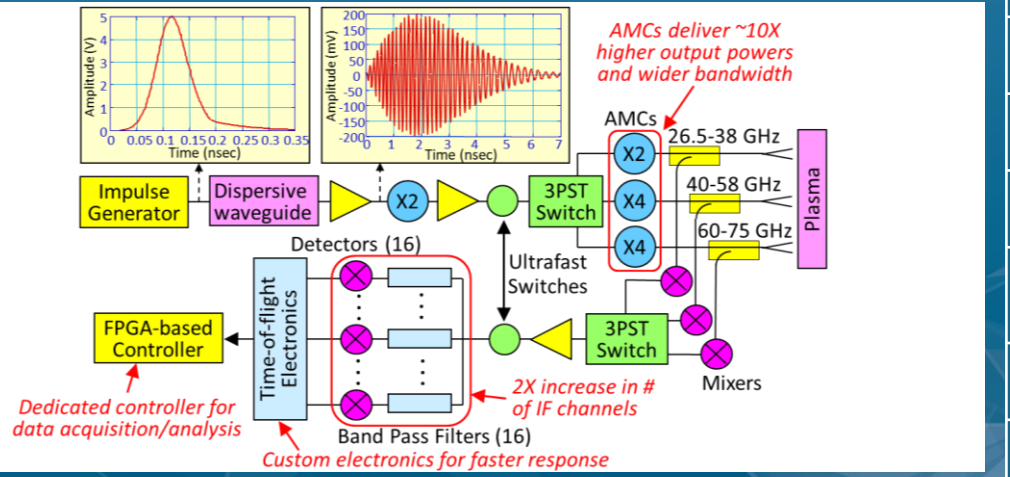

Contact(s)	 **Neville C. Luhmann, Jr.** Distinguished Professor ncluhmann@ucdavis.edu  **Calvin W. Domier** Project Scientist cwdomier@ucdavis.edu 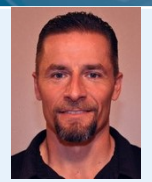 **Jon Dannenberg** Development Engr. dannenberg@ucdavis.edu
Key References/Links	A next generation ultra short pulse reflectometry (USPR) diagnostic, *Rev. Sci. Instrum.* **92**, 034714 (2021) https://doi.org/10.1063/5.0040724

Key Properties	
Physical Property to be Measured	Time-resolved electron density profiles
Technique	Pulsed radar reflectometry using 3–5 nsec frequency chirps
Plasma parameter range	Densities varying from 0.9–6.9 x 10^{19} m^{-3} with current setup, expandable to 0.1–15 x 10^{19} m^{-3} with additional components
Resolution (time)	3–12 μsec, depending on the density fluctuation level in the regions being probed
Resolution (space)	3–15 mm, depending on the density fluctuation level in the regions being probed
Resolution (frequencies)	60 frequencies with current setup, easily expanded for increased resolution (time and/or space)
Plasma Device Interface	Requires mid-plane port (or one close to the mid-plane) through which 3 overmoded waveguides and pyramidal horns are positioned to view the plasma
Plasma Control Interface	Self-contained system using FPGA-based digitizers, requiring only START and STOP triggers
Suitable for MCF, ICF, MIF?	MCF
Form factor: transport	All components to fit within a ~1-m^3 wooden transport crate
Form factor: operation	0.2 x 0.2 x 1 m^3 near the device ~0.9 m of 19" equipment rack space away from the device Low loss SMA cables connect device components to rack Ethernet cable connect FPGA to external laptop
Set-up time	3–5 days, not including installation of in-vessel components
Minimum time for a measurement	1 week for commissioning, due to need to evaluate reflected signal levels and adjust signal gains accordingly
Research group website	https://sites.google.co/view/mmwave/home

1D Coded Aperture X-ray Camera - Pasadena, California

Caltech

- Take high-speed 1D X-ray movies
- S/N much better than pinhole

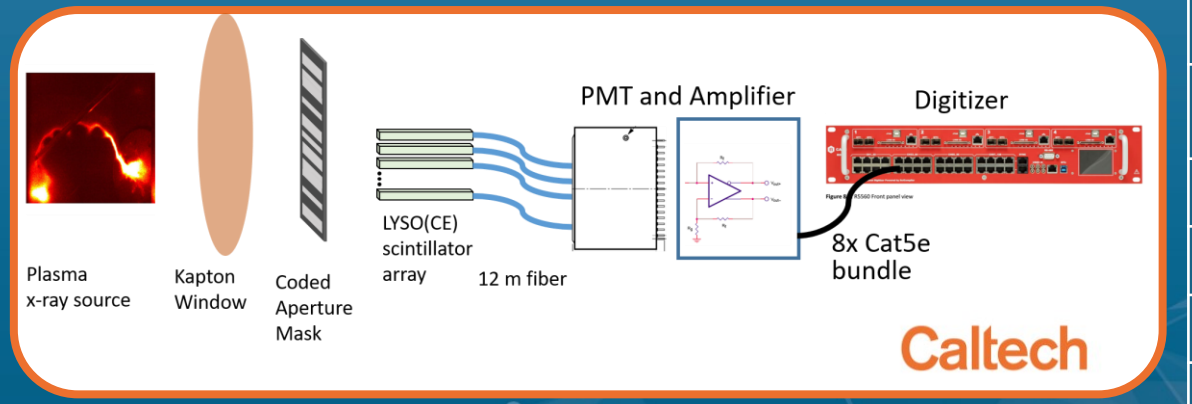

Contact(s)	**Paul Bellan**, pbellan@caltech.edu **Seth Pree**, sethpree@caltech.edu
Key References/Links	Visible-light prototype described in Haw and Bellan, Rev. Sci. Instrum. **86**, 043506 (2015), https://authors.library.caltech.edu/57176/1/1.4917345.pdf Group: http://www.bellanplasmagroup.caltech.edu

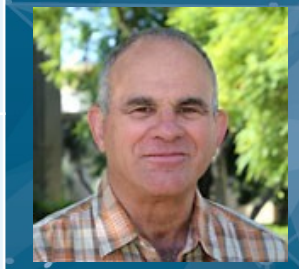

PI: Paul Bellan

Key Information	
Physical Property to be Measured	Image X-rays with both space and time resolution
Technique	Imaging via coded aperture on scintillator array
Plasma parameter range	Any plasma that produces x-ray pulses
Resolution (time)	40 ns (determined by current scintillator's fall time) Can be reduced to 8 ns with faster scintillator
Resolution (space)	Camera has 128x1 pixels on a 1-mm pitch. Resolution is determined by mask element size (> 300 μm)
Sensitive Spectrum (energy)	5–100 keV+ (depending on mask material)
Interface	Diagnostic is controlled by a laptop. Triggering can be done with a TTL signal.
Suitable for MCF, ICF, MIF?	MCF, MIF, marginally suitable for ICF depending on duration
Form factor: transport	The camera head and attached fiber bundle need to be shipped in a box which is ~3'x2'x1'. Amplifier and digitizer have a combined size comparable to a desktop PC.
Form factor: operation	Camera head is located near plasma and requires installation of an x-ray transparent vacuum window with line of sight to plasma. Amplifier and digitizer are electrically isolated by 12 m of optical fiber and can be mounted in 10U of a 19" computer rack.
Set-up time	1 day
Maximum record time	64 μs at maximum sample rate. Digitizer can record 8000 samples/event.
Minimum time for a conclusive physics measurement	This is a single-shot measurement, but a conclusive measurement may require many shots to adjust alignment and gain.
Minimum plasma duration or # of pulses for a good measurement	For a video, the plasma should exist for more than ~100 ns. For plasma durations shorter than the resolution, the detector can generate a 1-frame, 1D image of x-ray bursts.

arpa·e

Ion energy analyzer (IEA) - Princeton, NJ

Princeton Plasma Physics Laboratory

Measure the energy of ions in warm or hot plasmas or ion beams

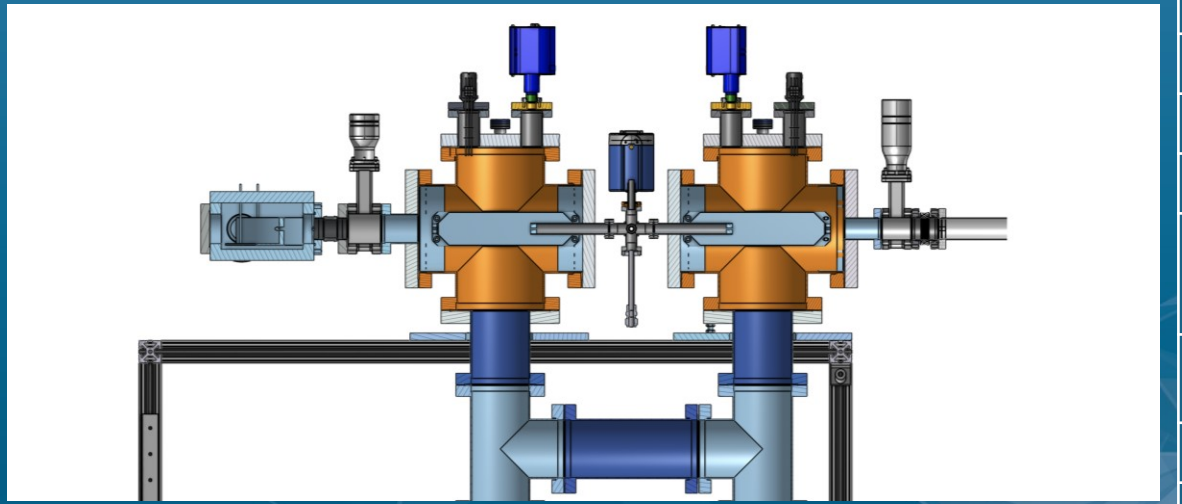

Contact(s)	**S.A. Cohen,** scohen@PPPL.gov
Key References/Links	P. Beiersdorfer, et al., Rev. Sci Instr. **58**, 2092 (1987), https://doi.org/10.1063/1.1139469. A. Ranjan, et al., J. Vac. Sci. Tech. A **24**, 1839 (2006), https://doi.org/10.1116/1.2244537.

Key Properties	
Physical Property to be Measured	Ion energies: 0.05–5 keV
Technique	Stripping cell to form ions of escaping charge-exchange neutrals, followed by an ion energy analyzer
Plasma parameter range	Size: 1-30 cm, Ion energy 0.05–5 keV, line density to 10^{14} cm^{-2}
Resolution (time)	<0.1 ms
Resolution (space)	1 cm
Resolution (energy)	10%
Interface	Channeltron detector, followed by pre-amplifier, amplifier, and information storage and processing equipment. Computer control of IEA instrument.
Suitable for MCF, ICF, MIF?	MCF, ion be ams
Form factor: transport	0.5m x 2m x 2m, 300 lbs
Form factor: Power	300 W
Set-up time	2 days
Minimum time for complete machine parameter scans	For a time resolution of 5 ms and one line-of-sight , 20 seconds of cumulative plasma time per machine condition.
Minimum plasma duration or # of pulses for a good measurement	One second of plasma time for a time resolution of 0.1 seconds.
Other characteristics	Gas supply line (2 sccm), exhaust line for pumps are needed, synchronization with plasma, local control of SC-IAE.

arpa·e

Portable Diagnostic Package, ORNL and Univ. of Tenn.- Knoxville, TN

Oak Ridge National Laboratory

A portable diagnostic package (PDP) provides spectroscopic measurements of key plasma parameters, supported by research personnel from ORNL and UTK.

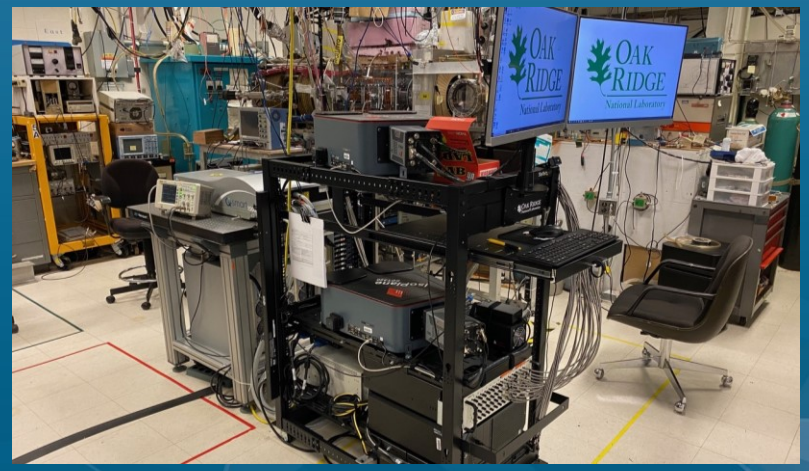

Contact(s)	**Theodore Biewer**, biewertm@ornl.gov **Drew Elliott**, elliottdb@ornl.gov
Key references/links	Design and implementation of a portable diagnostic system for Thomson scattering and optical emission spectroscopy measurements Rev. Sci. Instr. **92**, 063002 (2021); https://doi.org/10.1063/5.0043818

Key Properties	
Physical Property to be Measured	Electron temperature and density, impurity ion temperature and density
Technique	Thomson Scattering (TS) and Optical Emission Spectroscopy (OES)
Plasma parameter range	TS: T_e 2–1000 eV; n_e 10^{19}–10^{21} m^{-3}; OES: T_i 2–100 eV
Resolution (time)	TS: 10 ns, OES: >1 μs
Resolution (space)	TS: 11 chords, ~>1 mm/chord, OES: 11 chords
Interface	System: 120-V AC power, synchronization trigger. TS: 2 ports for laser entry and exit, 1 port for light collection OES: 1 port for light collection Standard 1-3/8” or 2-3/4” conflat ports typically used.
Suitable for MCF, ICF, MIF?	Typically for magnetically confined fusion plasmas
Form factor: transport	Fits in a van
Form factor: operation	3x3x4 ft optical table for laser, 2x5x6 ft cart for instrumentation
Set-up time	OES: <1 week to measurement, TS: ~10 weeks to physics measurement including laser alignment and calibrations
Minimum time for a measurement	TS: 10-Hz laser rep rate, OES: 2-ns phosphor gate time
Other characteristics	On-board data acquisition and processing
Special considerations	Class-IV laser safety protocols required
Physical Property to be Measured	Electron temperature and density, impurity ion temperature and density

arpa·e

Fusion Costing Capability Team

Princeton Plasma Physics Laboratory & Woodruff Scientific

Costing analysis traditionally is a multi-year team activity. We have adapted the costing process, based on ARIES [1] and Sheffield [2], to work for any fusion energy system, producing standardized cost reports, cost-driver analysis, and cost-reduction programs.

[3]

[4]

[5]

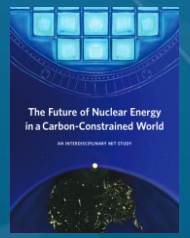

[6]

Contact(s)	**Simon Woodruff:** (505) 316 3130 simon@woodruffscientific.com **Mike Zarnstorff:** (609)243-3581 zarnstorff@pppl.gov **Ronald Miller:** rmiller@decysive.com **Eric Ingersoll:** eric.ingersoll@lucidcatalyst.com
Key Links	ALPHA program costing study: Final Report 2017 Final Report 2020 Home page for costing team

Key Properties	
Physical Property to be Measured	Total Capital Cost (TCC) and Levelized Cost of Electricity (LCOE)
Technique	Power balance coupled to a radial build and balance of plant
Interface	Web-based forms and in-person interviews
Suitable for MCF, ICF, MIF/MTF?	We have developed a flexible costing framework applicable to all fusion systems.

Total Capital Cost

Total Capital Cost (TCC) of power core:

$$TCC = M_{core} \times C_{factor}$$

where M_{core} is the mass of the core in kg and C_{factor} is a cost per kg, We are doing careful radial builds and applying different cost factors to different parts of the reactor.

Levelized Cost of Electricity

$$LCOE=(C_{AC}+(C_{OM}+C_{SCR}+C_F)*(1+y)^Y)/(8760*P_E*p_f)+C_{DD}$$

where C_{AC} [$/yr] is the annual capital cost charge (entailing the total capital cost of the plant), C_{OM} [$/yr] is the annual operations and maintenance cost, C_{SCR} [$/yr] is the annual scheduled component replacement costs, C_F [$/yr] is the annual fuel costs, y is the annual fractional increase in fuel costs over the expected lifetime of the plant Y [years], P_E [MWe] is the electric power of the plant, p_f is the plant availability (typically 0.6-0.9) and C_{DD} [mill/kWh] is the decontamination and decommissioning allowance.

[1] ARIES, see archives at qedfusion.org
[2] J. Sheffield and S. L. Milora, Generic magnetic fusion reactor revisited, Fusion Science and Technology, vol. 70, no. 1, pp. 1435, 2016. [https://doi.org/10.13182/FST15-157]
[3] Conceptual Cost Study for a Fusion Power Plant Based on Four Technologies from the DOE ARPA-E ALPHA Program, Bechtel National, Inc. Report No. 26029-000-30R-G01G-00001
[4] WHAT WILL ADVANCED NUCLEAR POWER PLANTS COST? A Standardized Cost Analysis of Advanced Nuclear Technologies in Commercial Development, Energy Options Network
[5] The Future of Nuclear Energy in a Carbon-Constrained World, AN INTERDISCIPLINARY MIT STUDY, MIT Energy Initiative 2018
[6] Revisit of the 2017 ARPA-E Fusion Costing Study (2020), https://arpa-e.energy.gov/sites/default/files/2021-01/Final%20Scientific-Technical%20Report_%20Costing%20%284%29.pdf

arpa·e