Low-temperature Ferroelectric Power Generation

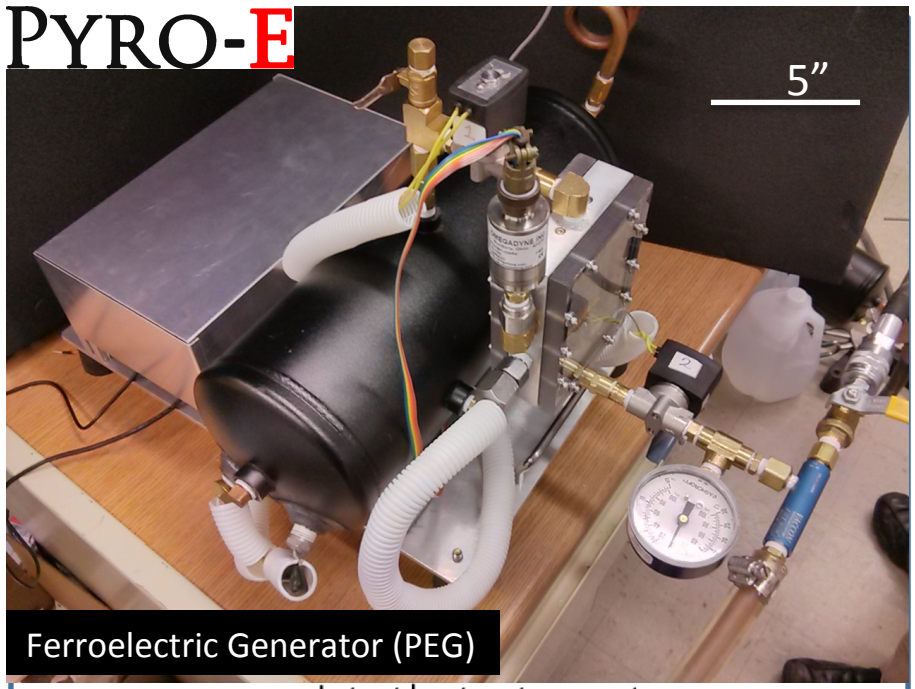

Ferroelectric Generator (PEG)

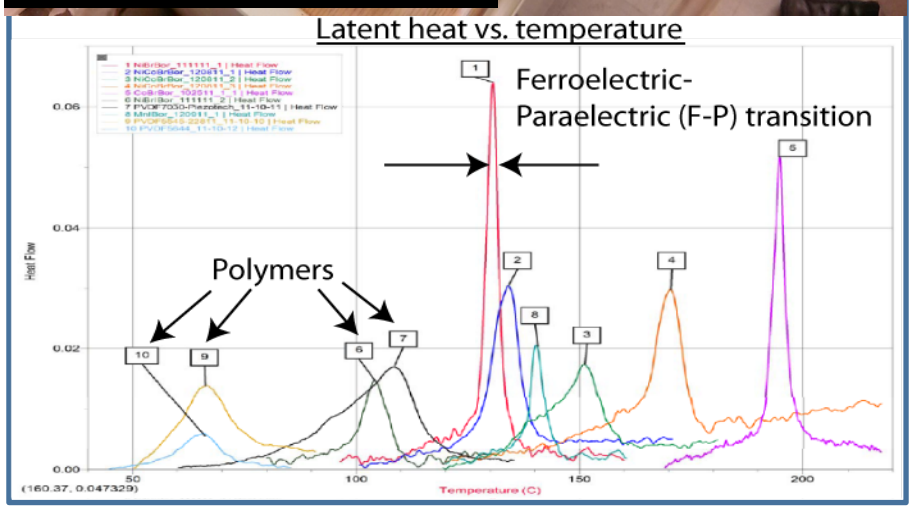

- Solid-state generation for µCHP and efficiency retrofit

Technical Details

- 500 W – 2 kW
- 1 kW/kg
- 2 kW/m^3
- 6-12% efficiency
- Zero emissions, closed loop
- 40 – 60 ^{o}C exhaust
- 90 – 250 ^{o}C input
- Large redundancy / Negligible material fatigue for reliability
- <$1/W in total system cost (proj.)
- Fuel agnostic

Power Cycle Fundamentals

Pyro-E, Inc.

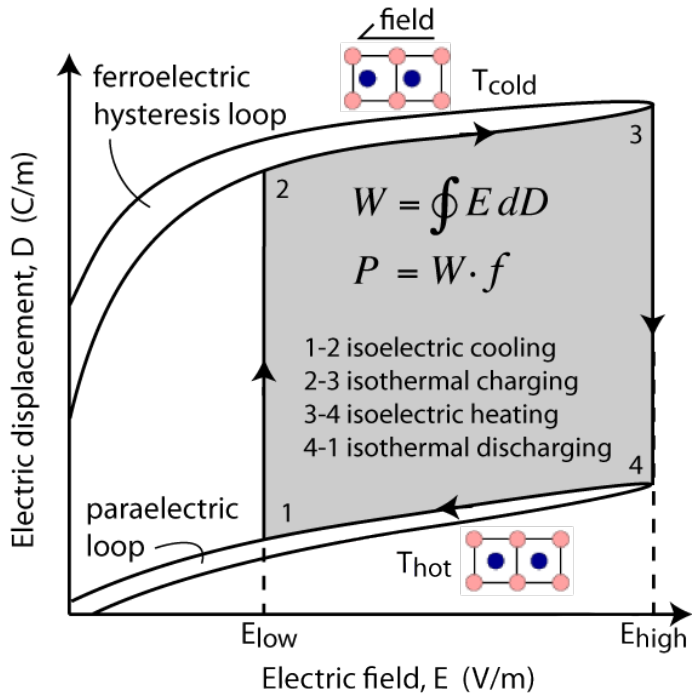

Electrical loop

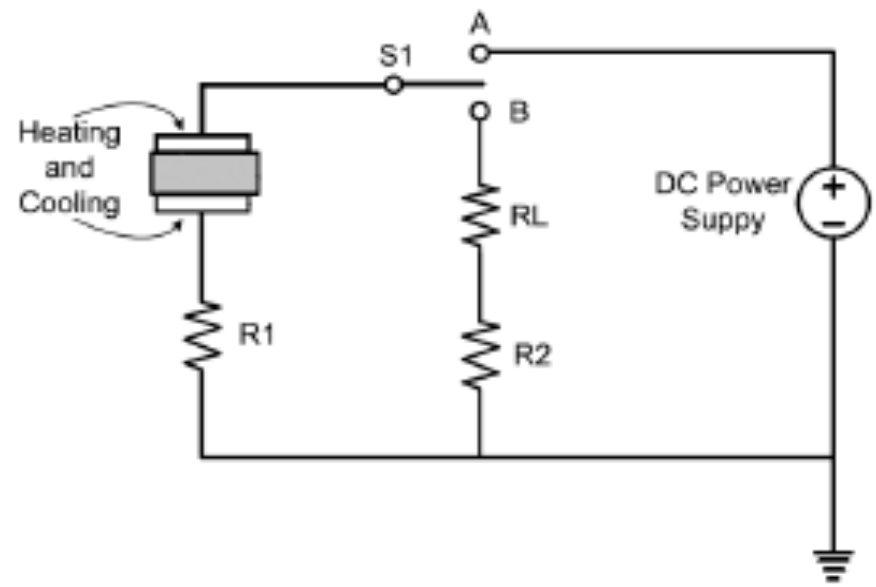

Efficiency, η

$$\eta_e = \eta_{Carnot}\eta_{Exergy}$$

$$\eta_{Ex} = \frac{L_H}{L_H + \rho C\left(T_H - T_C\right)\left(1 - \eta_{gen}\right)}$$

η_{Ex} – exergy efficiency

L_H – Latent heat

ρ – material density

T_H – Heat source temperature

C – Material specific heat

T_C – Heat sink temperature

η_{gen} – regeneration thermal efficiency

Thermal loop

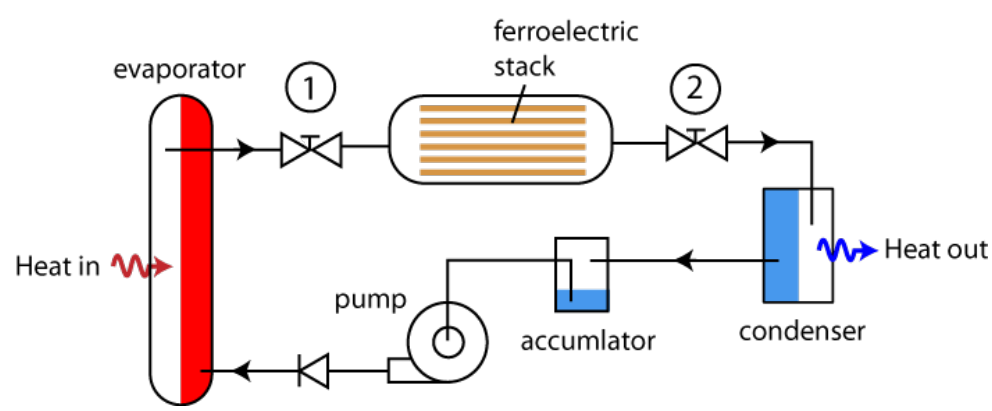

Progress To-date

Pyro-E, Inc.

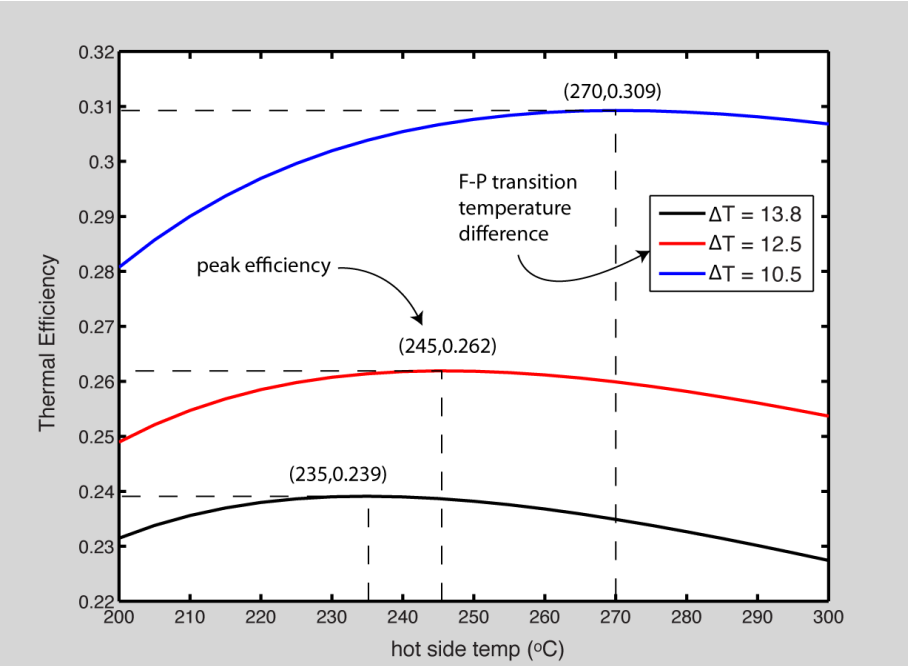

Sharper F-P transition improves efficiency

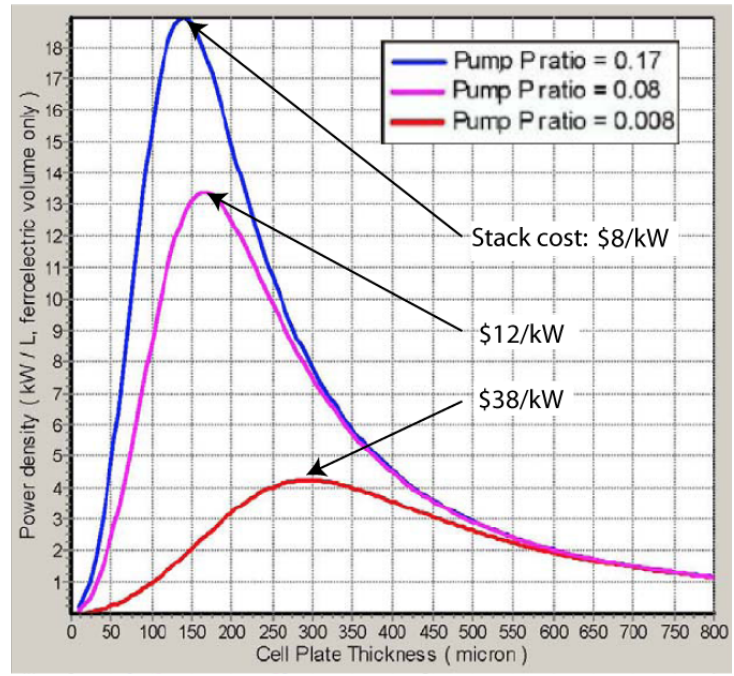

Faster cycling rate reduces cost

Milestones reached (TRL – 3)

- Laboratory prototype built.
- Material synthesize method & prelim. characterization completed.
- Feasibility study on subscale model verified.
- Component-level performance experimentally validated.

Development Needs

- Sharpen transition to raise efficiency.
- Faster cycling reduces cost.
- Performance parameterization needed.
- Feasibility study on 1-5 kW µCHP.
- Accelerated life testing to characterize durability.
- Manufacturing readiness on material.