CHANGING WHAT'S POSSIBLE

Electrochemical Approaches to Modular Power Generation

John Lemmon, Program Director

Advanced Research Projects Agency – Energy (ARPA-E)

June 6, 2013

Outline

Motivation and State of the Art

Necessary Innovations

Examples of New Ideas

Goals, Structure of this Workshop

Reminder: ARPA-E's Mission

Catalyze and support the development of transformational, high-impact energy technologies

Ensure America's

- National Security
- Economic Security
- Energy Security
- Technological Lead

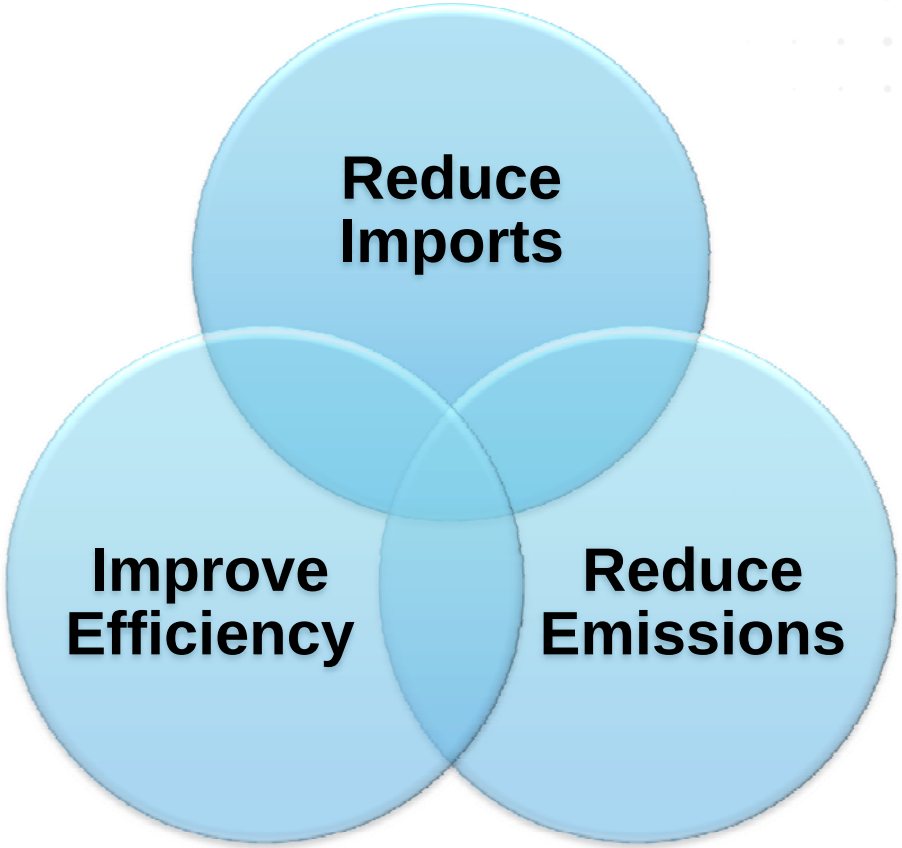

New Learning Curves

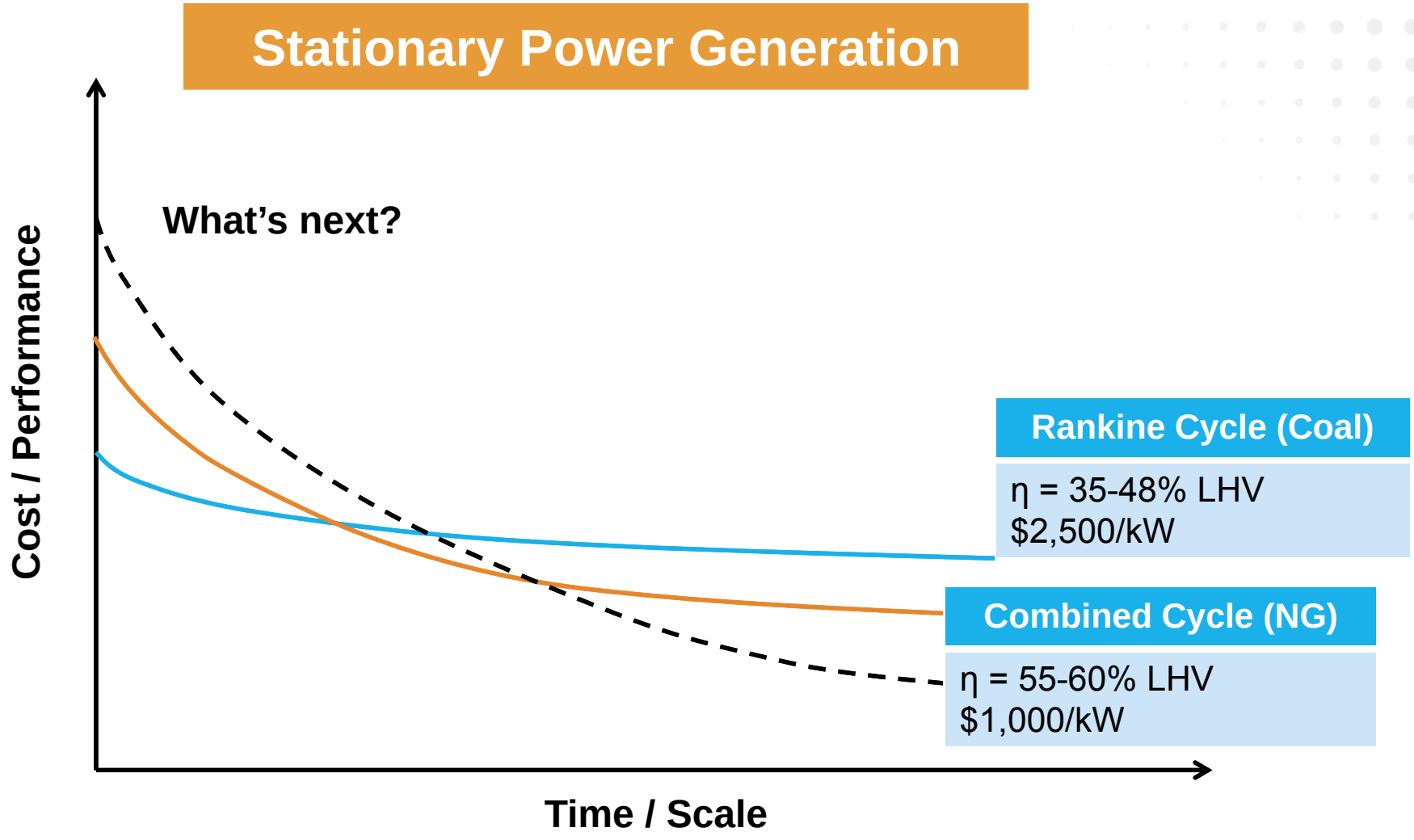

New Learning Curves

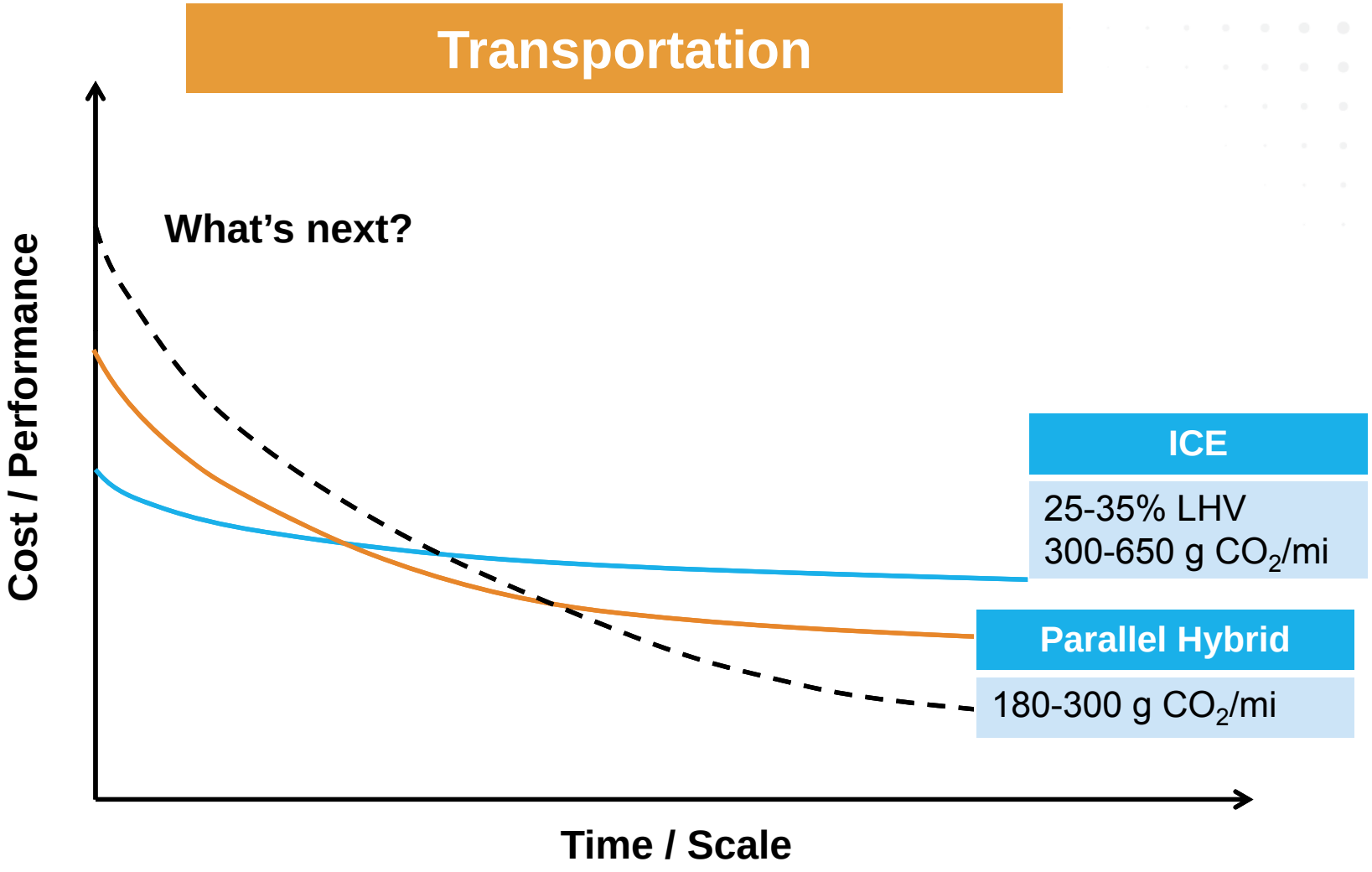

Source: fueleconomy.gov,
http://www.epa.gov/oms/climate/documents/420f11041.pdf

Enter Electrochemical Devices

- Fuel cells *could* be the basis of those new learning curves
  - Direct chemical to electrical conversion
  - Modular
  - Potential for low or zero GHG emissions

- *If* persistent & substantial challenges are overcome
  - System cost
  - Lifetime
  - Dependency on new infrastructure
  - Regulatory hurdles

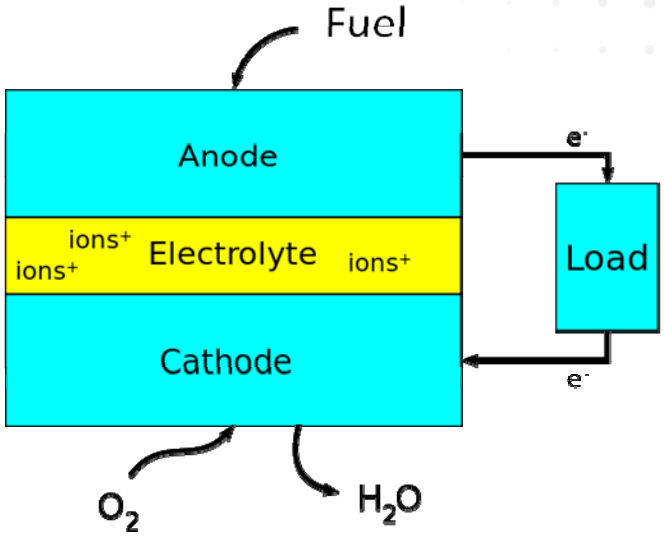

Existing DOE Fuel Cell Programs

Hydrogen and Fuel Cells Program (EERE)

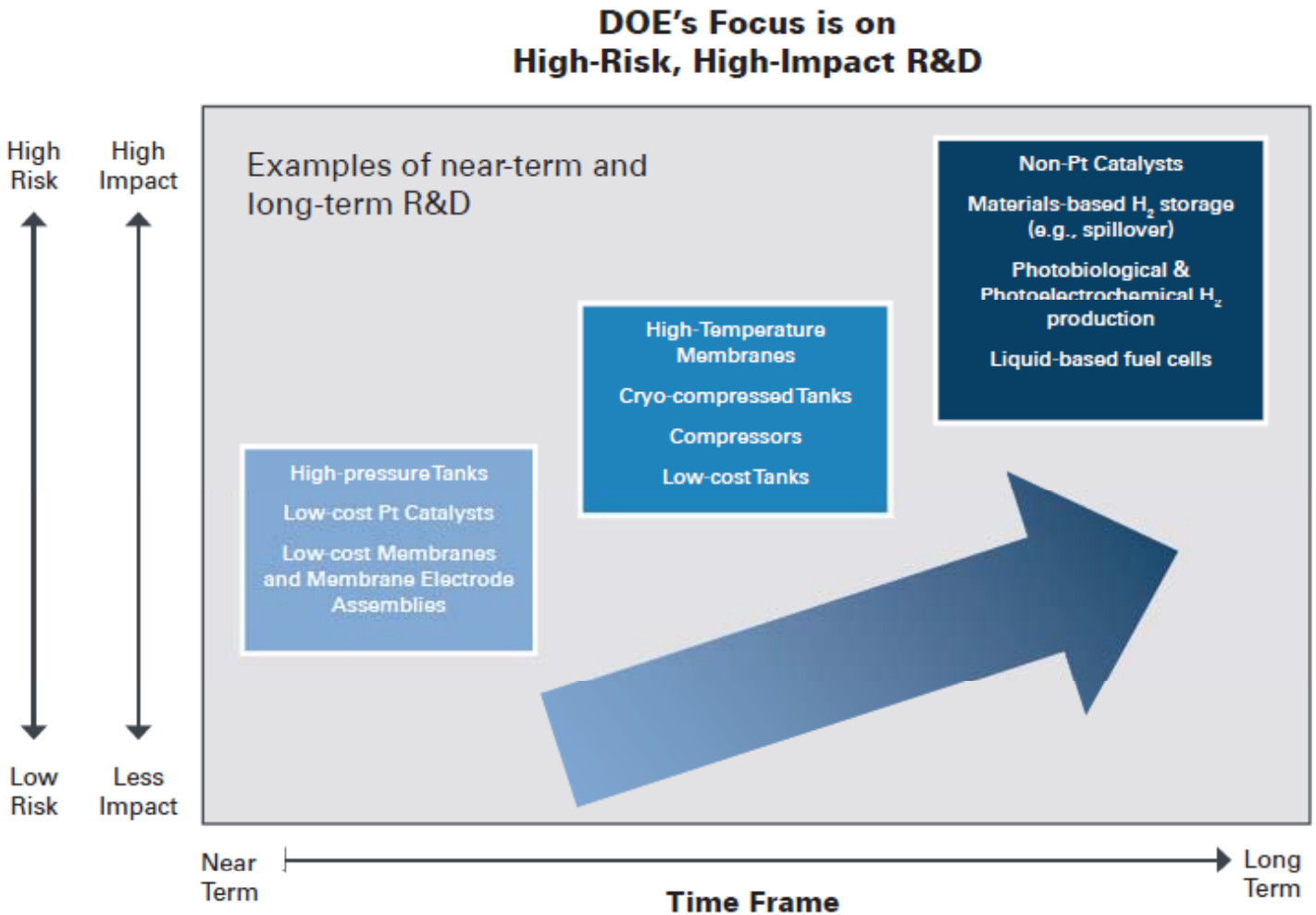

DOE H2 & FC Program Plan, 2011

Existing DOE Fuel Cell Programs

Hydrogen and Fuel Cells Program (EERE)

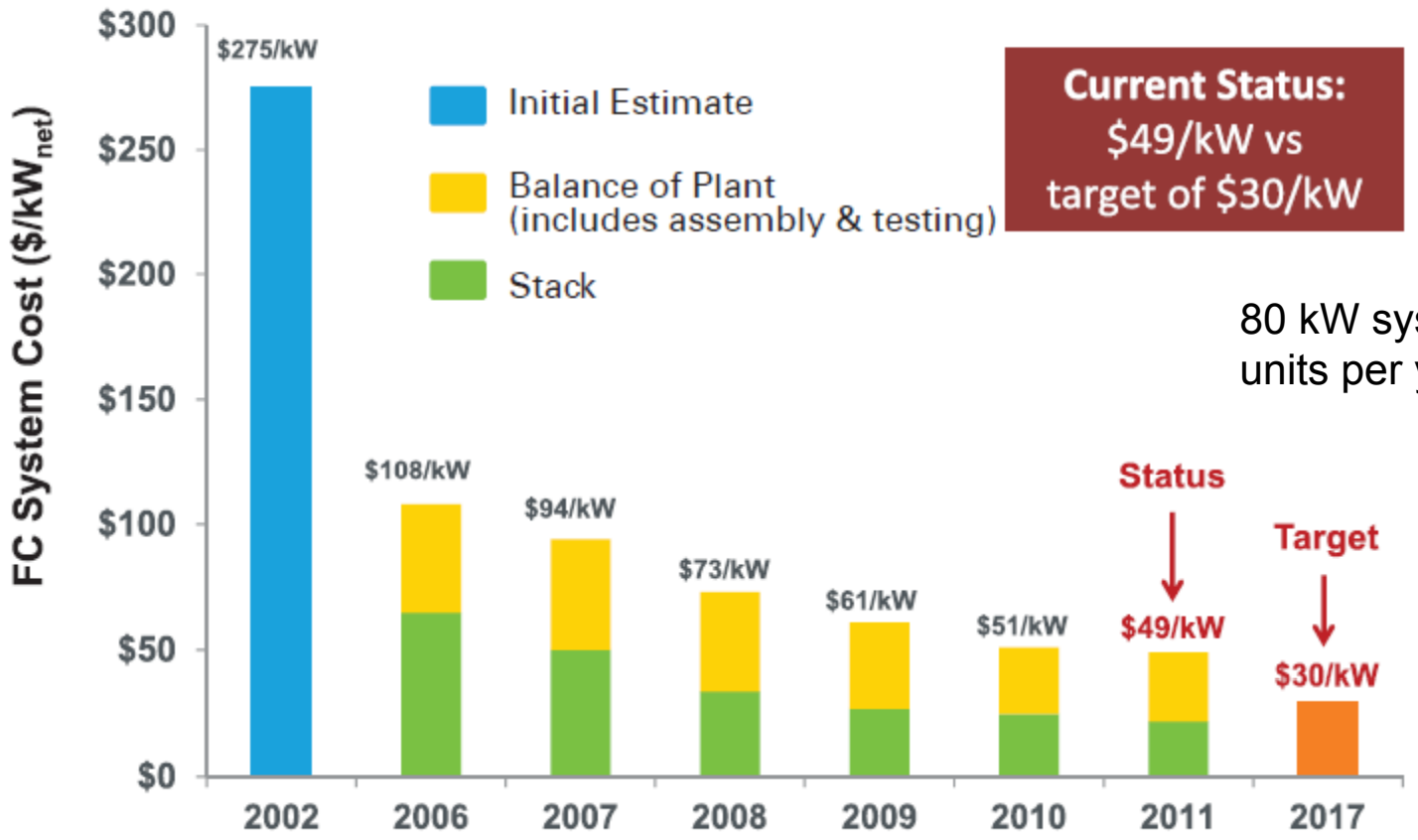

80 kW system, 500k units per year

DOE H2 & FC Program Plan, 2011

Existing DOE Fuel Cell Programs

Solid State Energy Conversion Alliance (SECA)
Office of Fossil Energy

Integrated Gasification Fuel Cell (IGFC) plant

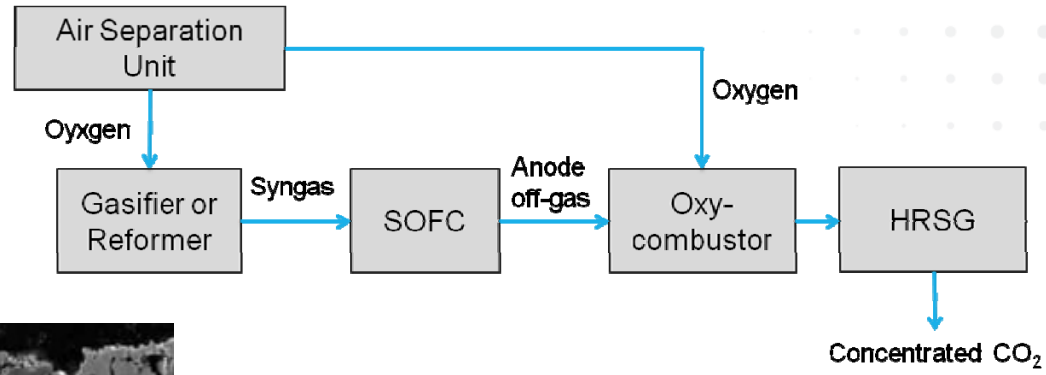

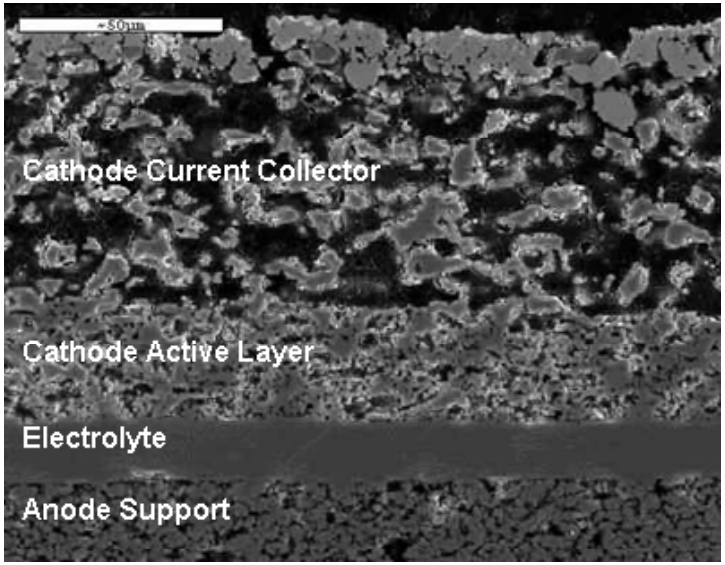

$(La,Sr)MnO_3$ or $(La,Sr)(Co,Fe)O_3$

$Zr_{(1-x)}Y_xO_{(2-x/2)}$ (YSZ)

Ni, YSZ

Image: Pal, Gopalan, Boston University

Existing DOE Fuel Cell Programs

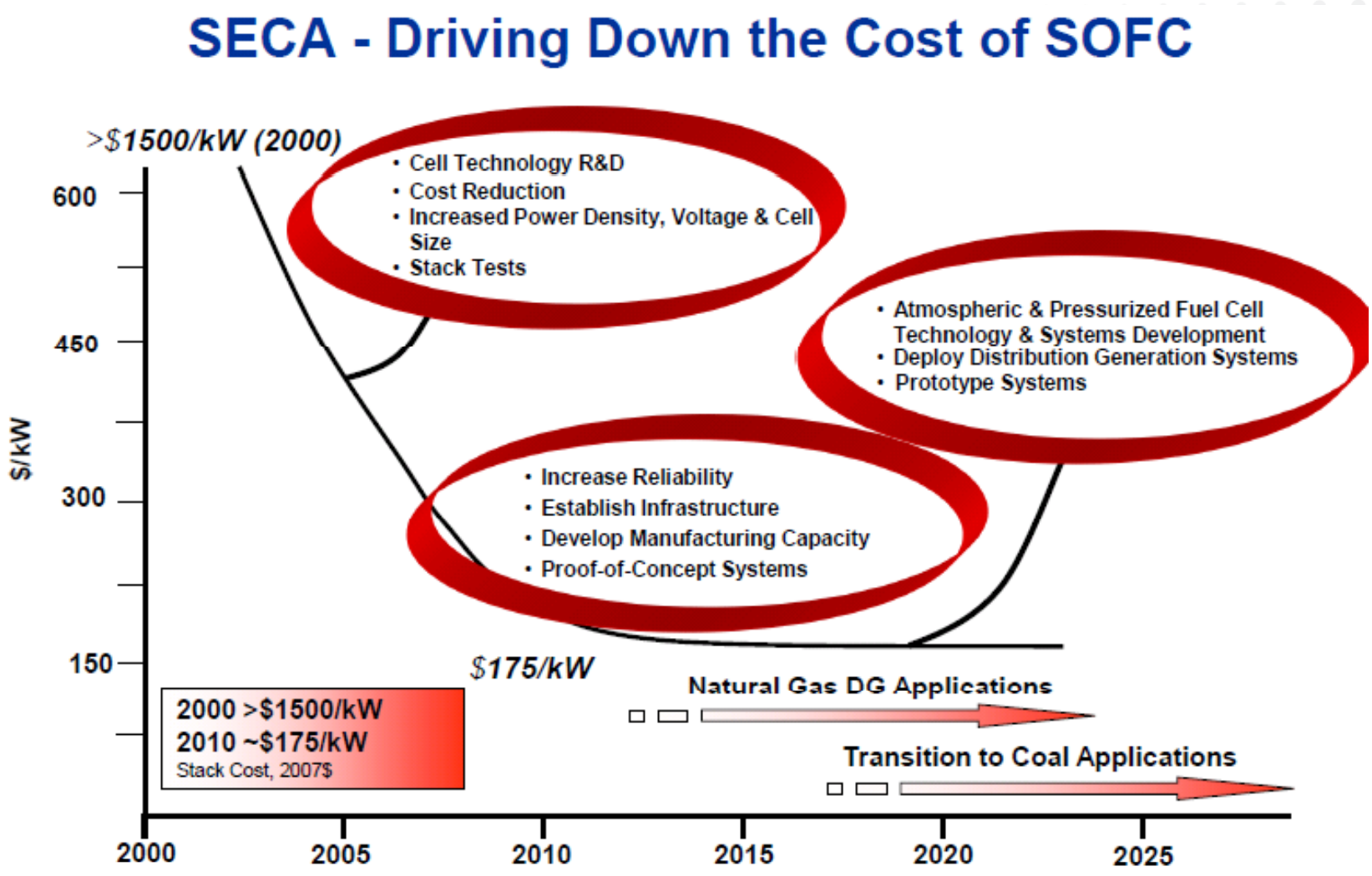

One Goal: Reduce GHG Emissions

High carbon → **Low carbon**

Today → Future

- Efficiency not worth price, risk
- Fuel cells require incentives to make business case

- Policy increases value of efficiency
- ‘Market’-based driving force

Learning Curves to Reach that Goal

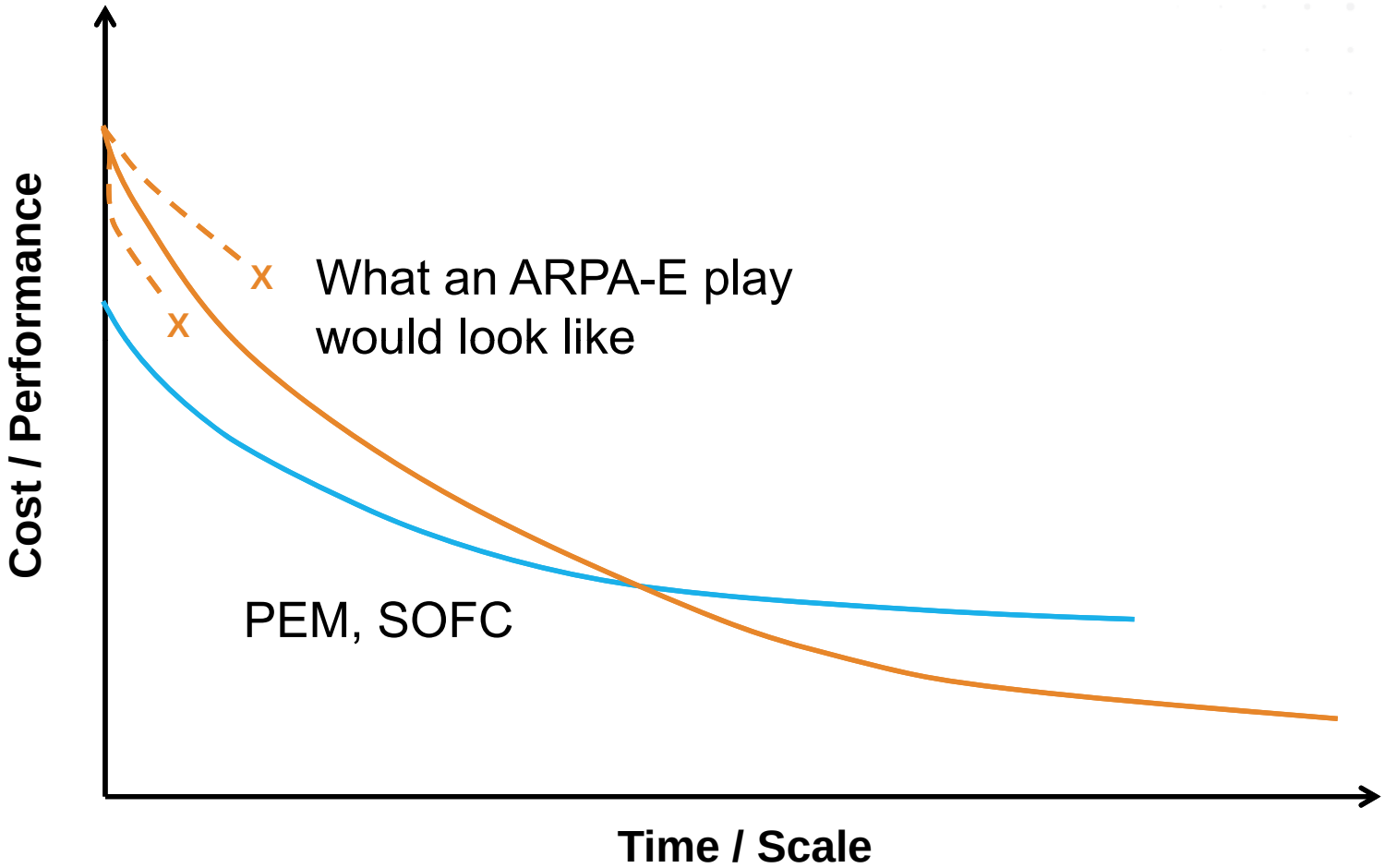

Purpose of this Workshop: Your Input

1. Is there an opportunity for an ARPA-E program here?
2. If so, what should it look like?

My thoughts on #1 above

Potential for new electrochemical materials/devices not receiving broad Federal funding….**absolutely**

Tech

Potential for new pathways for these new technologies to come to market with less dependence on incentives & infrastructure…**perhaps**

T2M

(Tech-to-Market)

Outline

Motivation and State of the Art

Necessary Innovations

Examples of New Ideas

Goals, Structure of this Workshop

New Fuel Cell Operating Regime

Tech

Temperature (°C)

800

600

400

200

Solid Oxide Fuel Cell (SOFC)

Power density

Fuel flexibility

Challenging manufacturing

Degradation

Thermal cycling

Proton Exchange Membrane (PEM)

Rapid start

Simpler materials integration

Hydrogen only

Expensive catalysts

Humid operation

Intermediate Temperature Fuel Cells

Tech

	Compared to Low T	Compared to High T
Strengths	• Lower PGM loading • Less H_2 purification • Less cooling required • Some direct reforming?	• Cheaper interconnects and seals • Fewer CTE problems • Greater ability to ramp/cycle
Weaknesses	• Longer start-up • Cycling ability less clear • Thermal challenges?	• Less direct reforming ability • Higher resistance & overpotentials

New Market Pathways

T2M

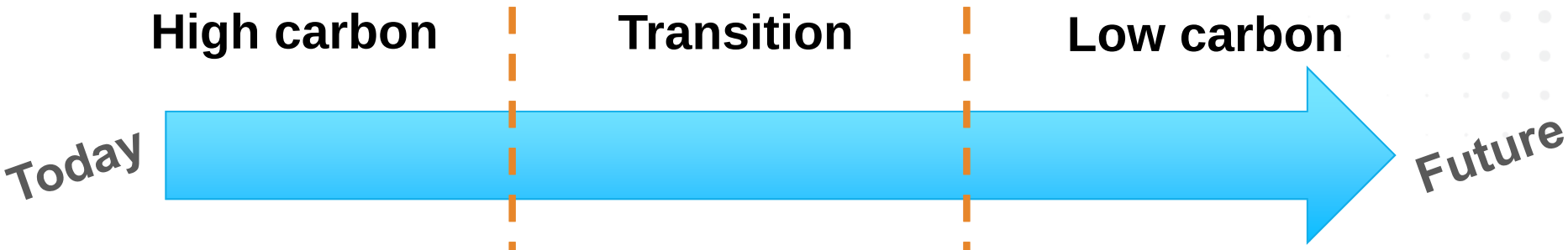

- Efficiency not worth price, risk
- Fuel cells require incentives to make business case

- Policy increases value of efficiency
- 'Market'-based driving force

Deploy technologies here without policy…

…that are also viable here

Stationary: Distributed Generation

T2M

- Power disturbances cost U.S. $180 billion / yr
- Massive blackout: $10B / event
- CAPEX for Transmission and Distribution investments: $30B / yr

What if we could Generate, Store, and Deliver electricity when and where it was needed?

Source: Dan Rastler, EPRI, 2012 DOE SECA meeting

Stationary: Distributed Generation

T2M

Monetizing the Value of Distributed Fuel Cells can result in lower "delivered" electricity than NGCC

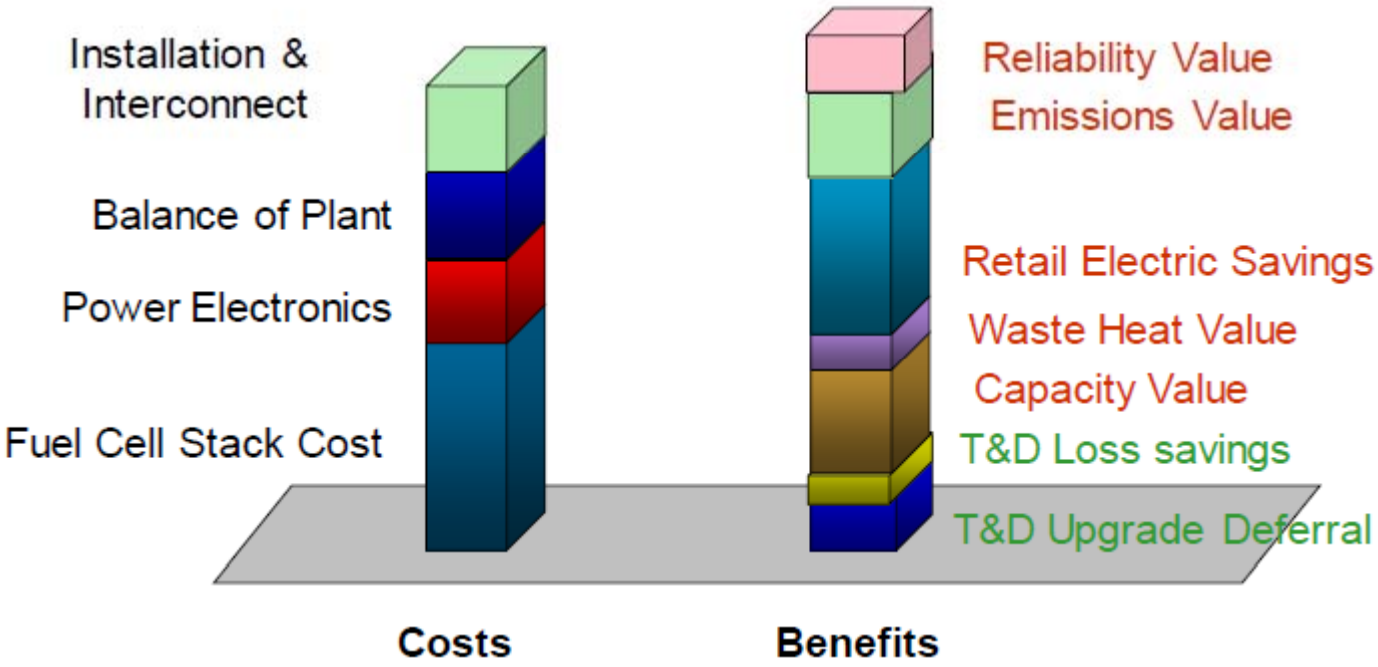

Values are Illustrative

Source: Dan Rastler, EPRI, 2012 DOE SECA meeting

ARPA-E Held a DG Workshop in June 2011

Single-family homes: 1-10 kW

Communities: 100-500 kW

- Installation price to end-user matters most
  - $1,500/kW or LCOE of $0.10/kWh required for mass adoption
  - $3,000 to $5,000/kW or $0.13/kWh would be nearer-term targets
- Long lifetime
  - System runs for > 7 years before replacement
  - 1,000 to 2,000 hours could be demonstrated in an ARPA-E project
- High efficiency
  - 1-10 kW: > 45% at half of power rating
  - 100 kW+: > 55% at half of power rating
- Highly reliable: less than 1 unplanned outage per year

Transportation: On-Board Reforming

T2M

- On-board reforming: 1990s – early 2000s.
  - In 1997, first FC stack operating on gasoline reformate (Nuvera).
  - DOE effort for on-board reforming was halted in 2004.
    - Missed targets for startup energy, time, transient response
    - Hybrid battery/ICE systems outperforming FCV systems
    - No U.S. market interest

Nuvera STAR™, gen 3
2007

- Should this be revisited??
- If a solution could be found, it solves the chicken-and-egg problem with hydrogen infrastructure and gets more FCVs out there faster

Where Tech & T2M Meet: System Cost

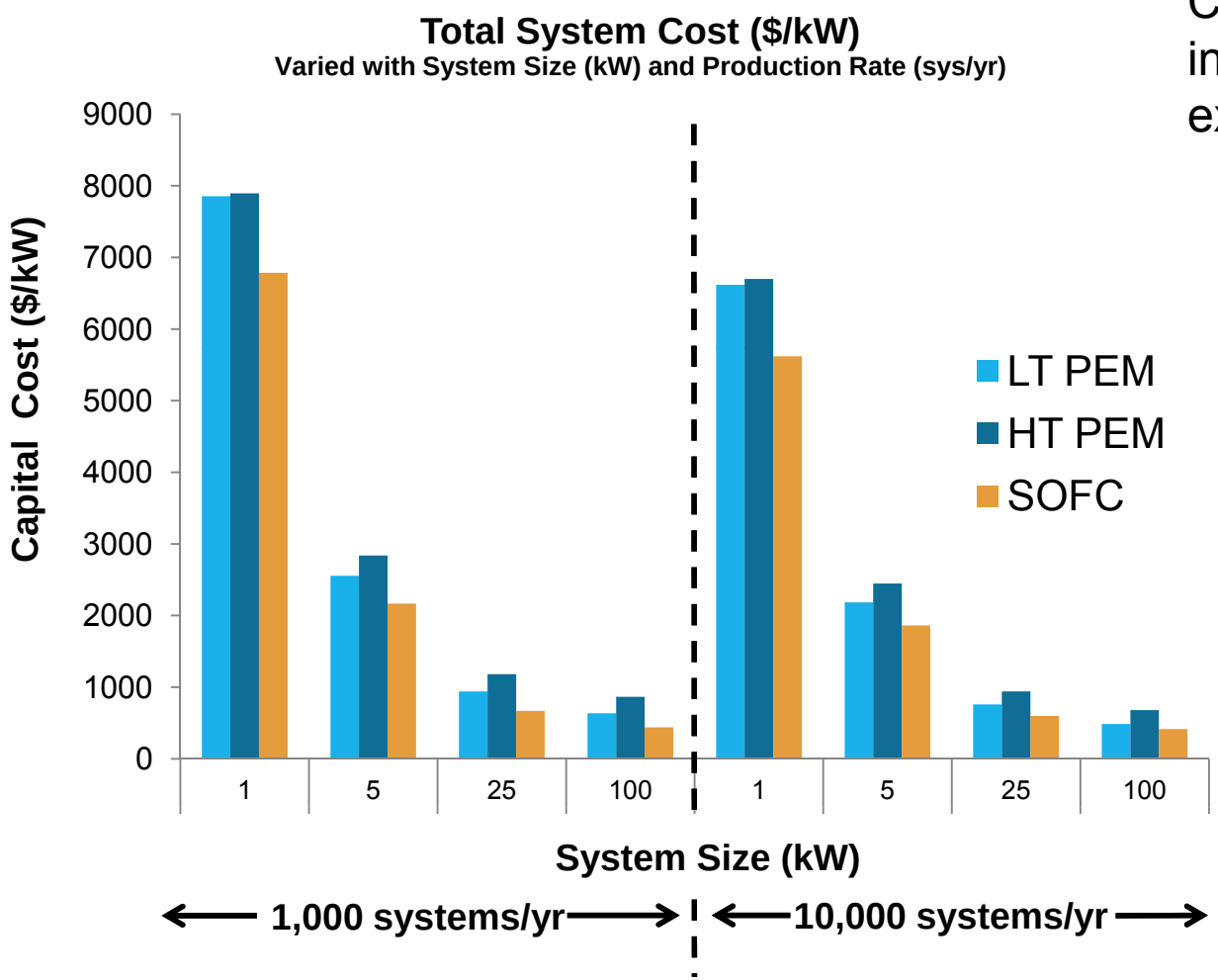

Capital cost does not include profit, R&D expenses, installation, etc.

- Deployment will depend on technology advances
- Is there an opportunity for new learning curves?

B.D James, et al (Strategic Analysis), "Manufacturing Cost Analysis of Stationary Fuel Cell Systems," report prepared for NREL 2012

~~Miracle~~ Tech Breakthrough #1

IT fuel cell stacks with high power density and low degradation

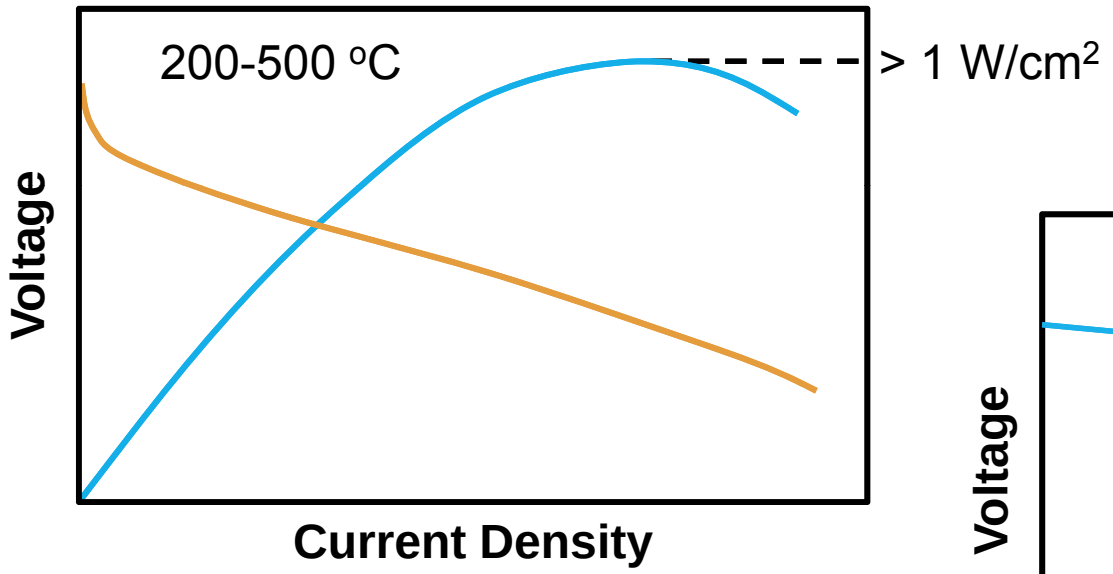

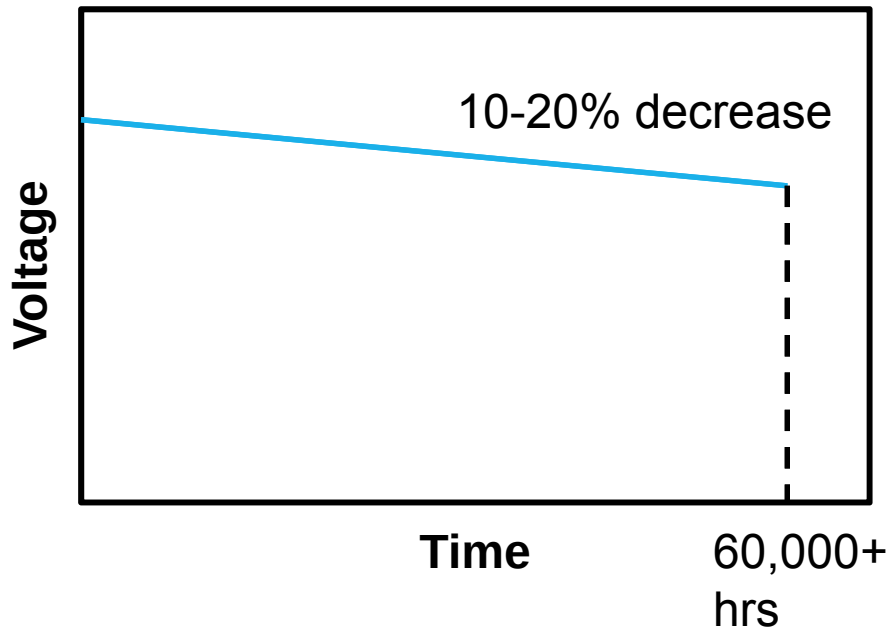

~~Miracle~~ Tech Breakthrough #2

Reduce # of parts in the system and/or add functionality

Reduce # of system components
• FC stack performs other BOP functions • New fuel processing ideas • Optimal thermal integration • Remove humidifier/water management

Additional functionality
• Fuel cell that also stores H_2 • Reversible fuel cells to use off-peak power • Increased load-following capability

Outline

Motivation and State of the Art

Necessary Innovations

Examples of New Ideas

Goals, Structure of this Workshop

Electrolytes for IT Fuel Cells

Not an exclusive list:

LT SOFCs

400 – 600 °C

- Composite electrolytes with interfacial pathways
- Multilayer electrolytes

IT Proton Conductors

200 – 400 °C

- Indium tin pyrophospate
- Solid acid fuel cells

HT PEM

180 – 200 °C

- Polybenzimidazole (PBI) composites
- Oxadiazole cross-linked polymers

New Fuel Reforming Concepts

Current Approaches

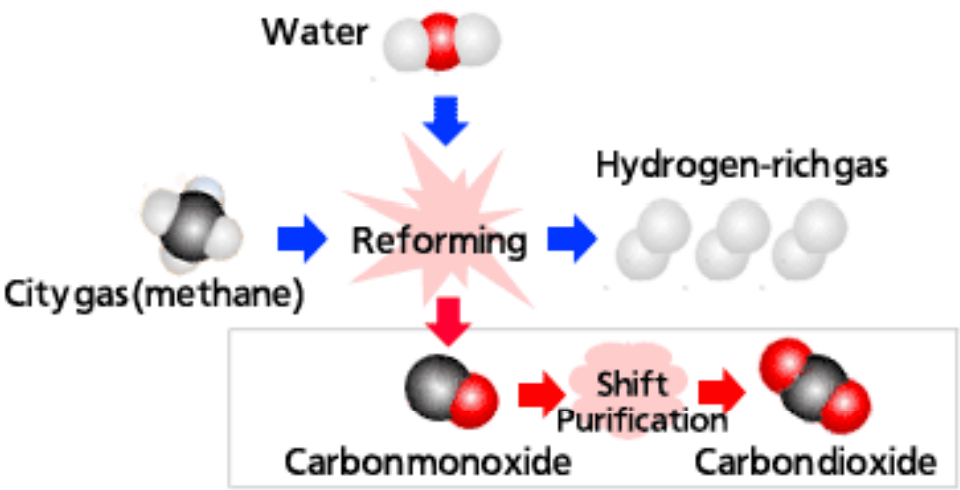

- Steam methane
- Partial oxidation
- Autothermal reforming
- Dry methane reforming

650 – 700 ^{o}C has been the lower T limit

New Fuel Reforming Concepts

A few new ideas

Ceramatec

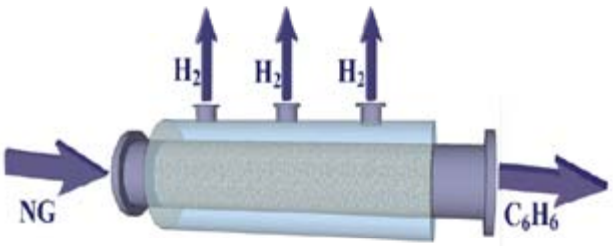

Protia

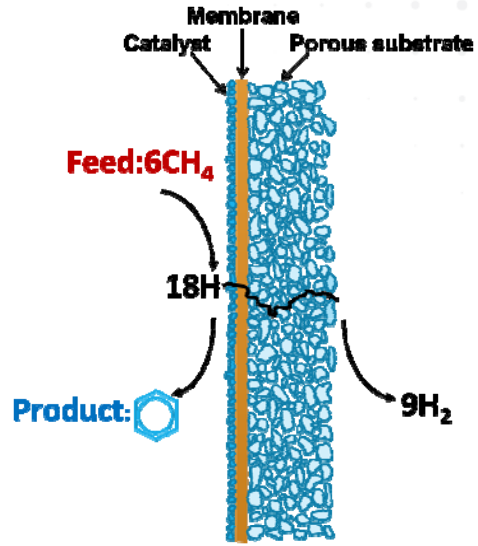

Electrochemical reforming, 450ºC

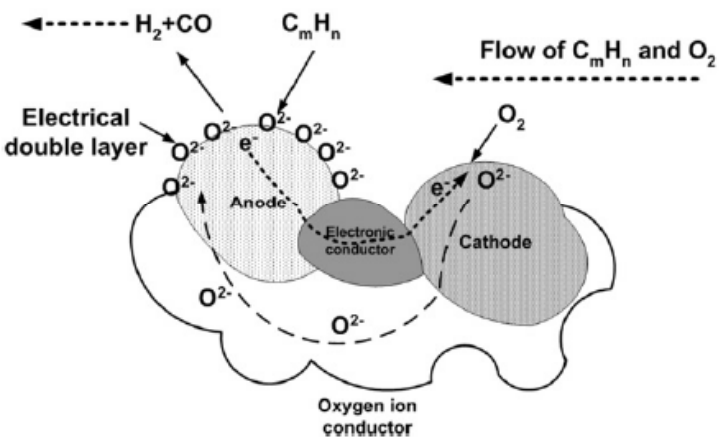

GTI

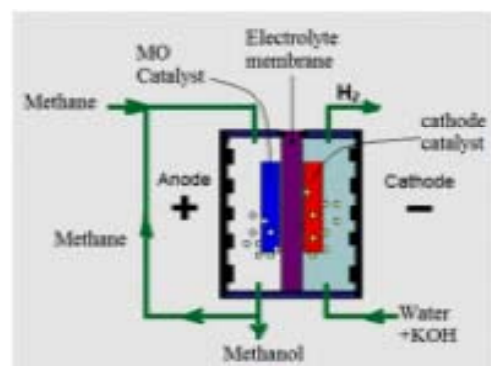

J. Hyd. Energy 37 (2012) 17928

Manufacturing

PEM: MEA and bipolar plate fabrication, assembly

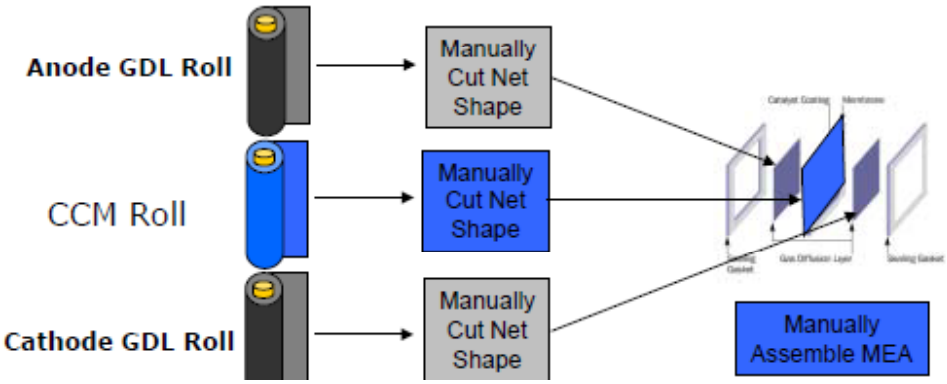

Ballard

SOFC: High T sintering and expensive interconnects

Versa Power Systems

Could these (or another) methods revolutionize cost?

- Spraying of near-net shapes
- Roll-to-roll processes
- Thin film / PVD
- New solution processes
- 3D printing

Rechargeable Fuel

Air Products, GE Global, GM, others

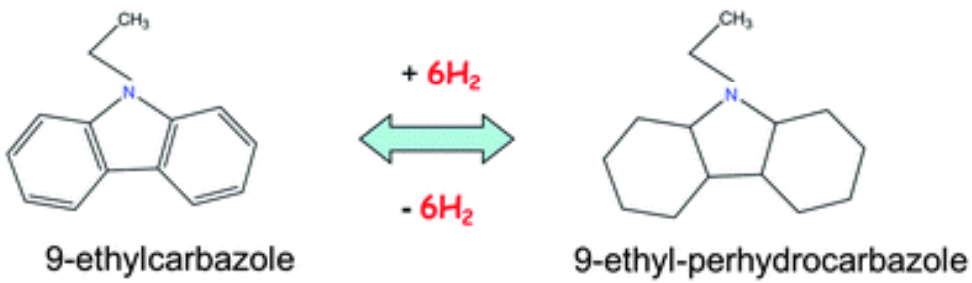

Catalyzed by:
Supported Ru, Rh

Ir-based pincer catalysts

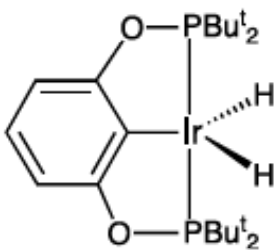

$IrH_2\{C_6H_3\text{-}2,6\text{-}(OPBu^t_2)_2\}$ (3)

Z. Wang, et al., J Organomet Chem 694 (2009) 2854

Other liquid carriers of H:

- Sodium borate, $NaBH_4$
- Ammonia borane, NH_3BH_3,
- Formic acid, HCOOH

Organic Hydride Flow (GE ERFC)

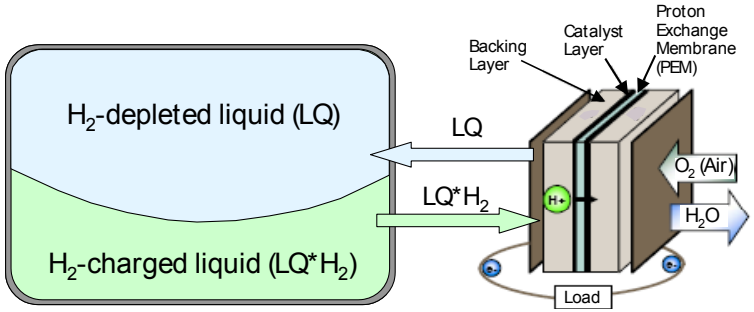

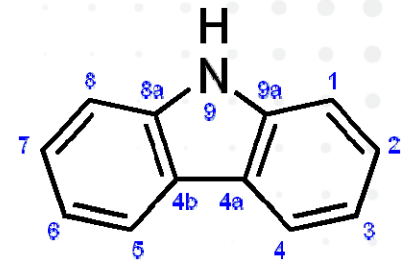

carbazole

O_2

Air Cathode

MEA – Electrocatalyst

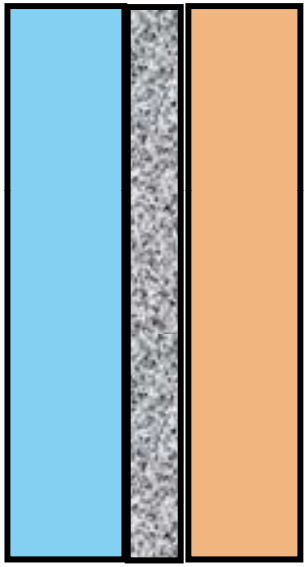

H_20

PEM
H^+ Conductor

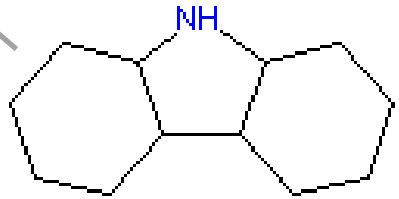

Hydro-carbazole
Tune enthalpy with substituents.

Key Challenges:
- Selective membrane
- Efficient electrocatalyst
- Water management

Benefits:
- Rechargeable from water
- Flow design
- High energy density 2382Wh/kg
- No CO_2

Rechargeable Fuel Cell

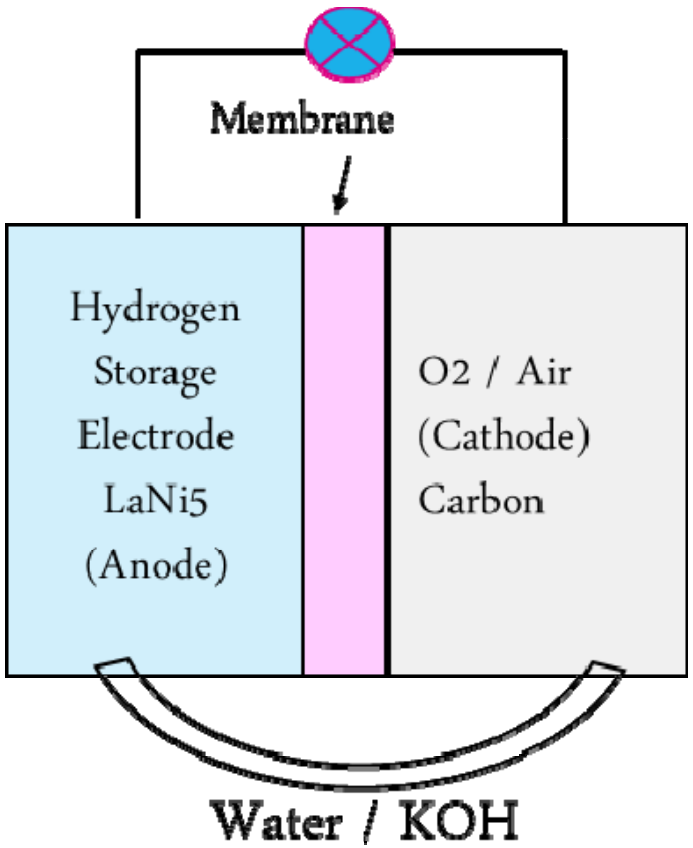

Charge Reactions:

Anode: $4M + 4H_2O + 4e \rightarrow 4M\text{-}H + 4OH^-$

Cathode: $4OH^- \rightarrow O_2 + 2H_2O + 4e$

Overall: $4M + 2H_2O \rightarrow O_2 + 4M\text{-}H$

Discharge (Fuel Cell) Reactions:

Anode: $4M\text{-}H + 4OH^- \rightarrow 4M + 4H_2O + 4e$ Cathode:

$O_2 + 2H_2O + 4e \rightarrow 4OH^-$

Overall: $4M\text{-}H + O_2 \rightarrow 2H_2O + 4M$

Cell Properties

Voltage	1.2V
Energy Density (P):	310 Wh/kg
Energy Density (T):	450 Wh/kg
Power Density:	480W/kg
Cost	$200 kWh
Efficiency	>90%
Cycles	2000

Hybrid Devices

- Fuel cell that can store H_2: combine conversion and storage.
  - Enables rapid start up
  - One set of power electronics
  - Reserve for peak power
  - Combined power and energy
- Fuel-Cell-Battery Viability
  - System level
  - Device
  - Materials level
  - Molecular level

Can Hybridization perform/cost benefits be realized?
Intermediate temperature necessary?

Ramping, Load Following Ability

Example of residential home daily load

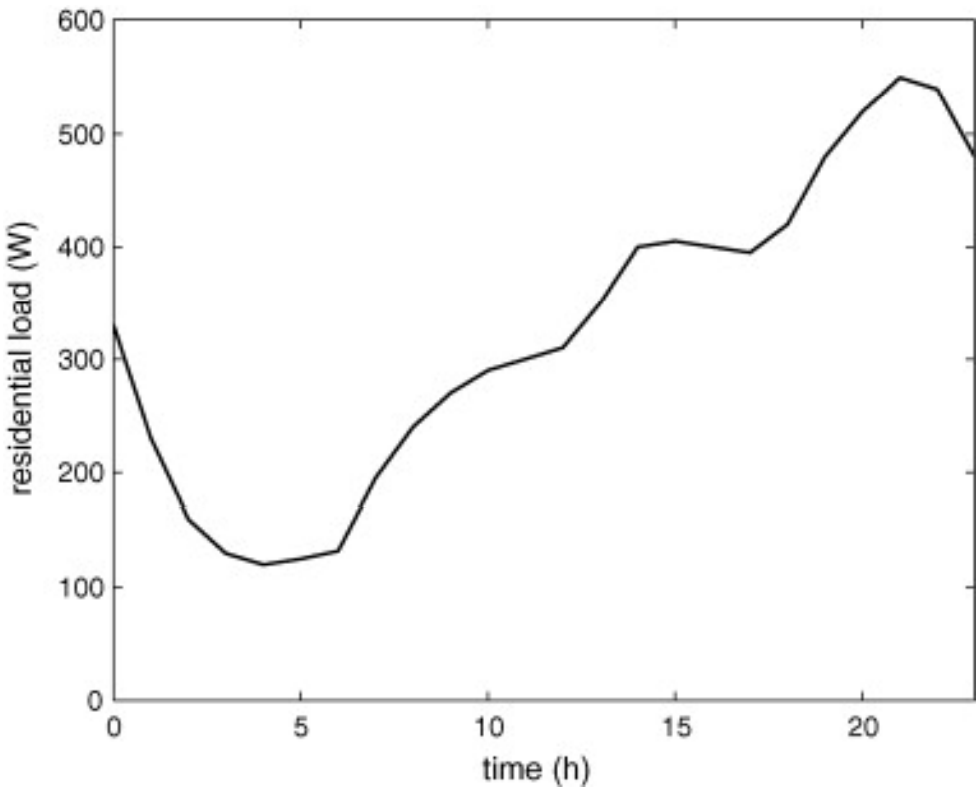

- Fuel cells and other DG options largely considered for baseload
- Increased load following ability and storage could change this
- Could this become a resource for the grid ('virtual' power plant?)

Real, et al., J. Power Sources 193 (2009) 315

Outline

Motivation and State of the Art

Necessary Innovations

Examples of New Ideas

Goals, Structure of this Workshop

Our Goals for this Workshop

- Reach out to scientific community: which of our hypotheses are solid, and which are off-base?
- Hear firsthand about needs from industry
- Bring together different research communities
- Provide opportunity to form new networks and teams*

*Important if a funding opportunity announcement (FOA) is released. No guarantee there will be one.

What We'll be Discussing

Thursday Afternoon

T2M

- If it works, will it matter?
- Entry markets
- What critical breakthroughs are needed?
- What a 3 year program would need to accomplish

Friday Morning

Tech

- Recent scientific advances that could solve persistent challenges
- Reimaging fuel cell functionality
- Stack innovations that impact the broader system

Breakout Sessions

Thursday Afternoon

T2M

- Distributed generation (2)
- Military applications
- Vehicles

Friday Morning

Tech

- IT electrolyte and electrode materials
- New fuel processing ideas
- New manufacturing methods
- Hybrid device configurations

Preliminary Vision for a Project

Merely an example, not prescriptive:

Technical Focus

- Create IT stack
- Innovative fuel processor
- Scalable way to manufacture
- Bonus: additional functionality

Desired Technical Outcomes

- Initial component work, then ?? kW prototype on HC fuel
- Good power density
- Low degradation rate
- Ability to manufacture
- Reduces # of pieces in system

T2M

- Potential first markets identified
- Industrial partners willing to put skin in the game