Thermal Energy Storage Systems for Peak Electricity from Nuclear Energy

Gigawatt-day to Gigawatt-year

Charles Forsberg

Department of Nuclear Science and Engineering
Massachusetts Institute of Technology
77 Massachusetts Ave; Bld. 42-207a; Cambridge, MA 02139
Tel: (617) 324-4010; Email: cforsber@mit.edu

ARPA-E Workshop on Thermal Energy Storage
Washington D.C.
January 31, 2011

Outline

- Energy storage requirements (Utility sector)
- Nuclear thermal-energy storage constraints
- Example nuclear thermal-storage systems
  - Heat for peak electricity
  - Heat for commercial and industrial customers

Utility Energy Storage Requirements for a Low-Carbon World

Electricity Demand Varies By The Hour, Day, Week and Year

New England Electrical Gird

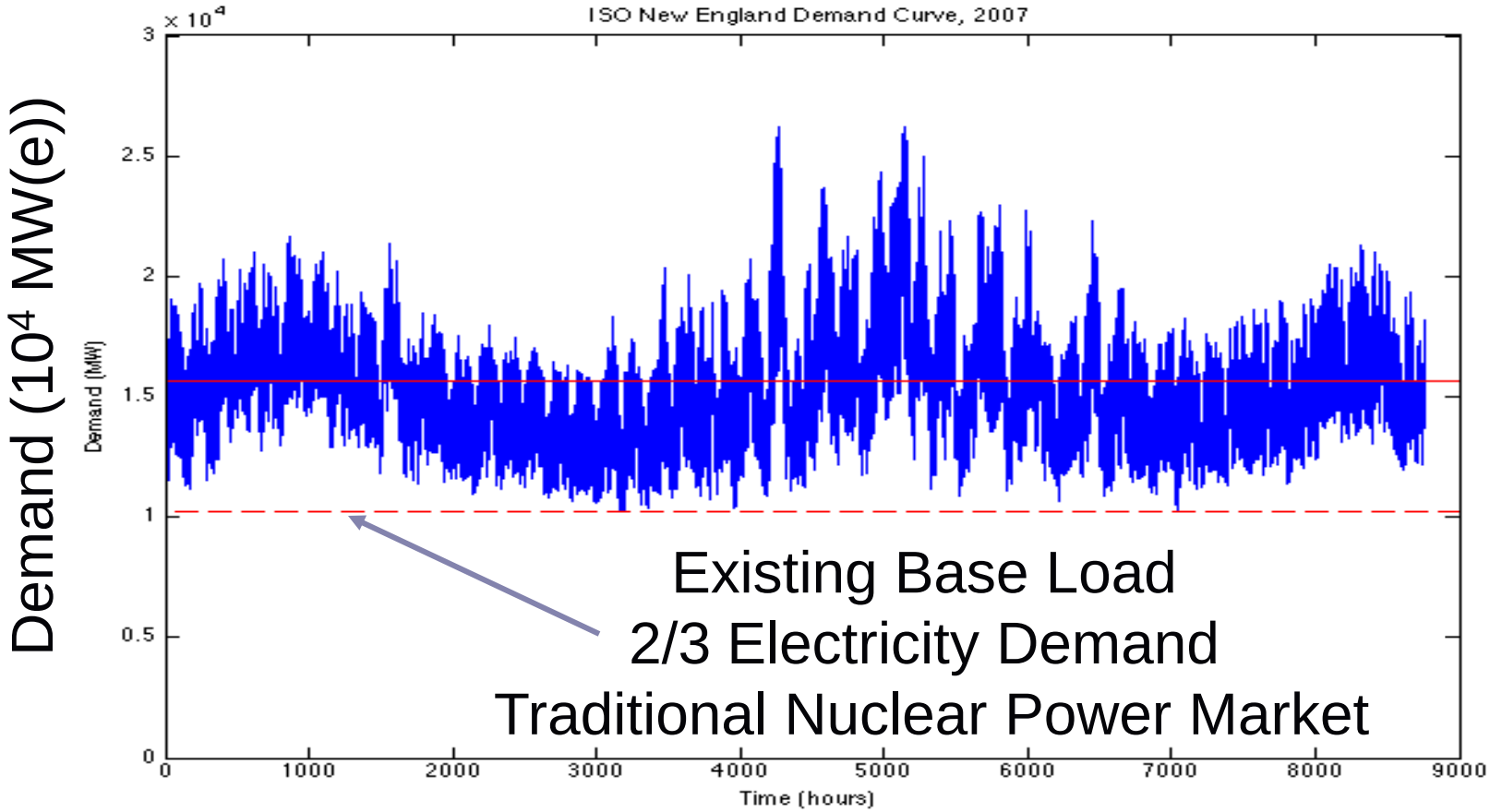

Time (hours since beginning of year)

If All-Nuclear Electricity and Perfect Electricity Storage System, ~7% of Electricity Produced Goes to Storage to Meet Peak Demand

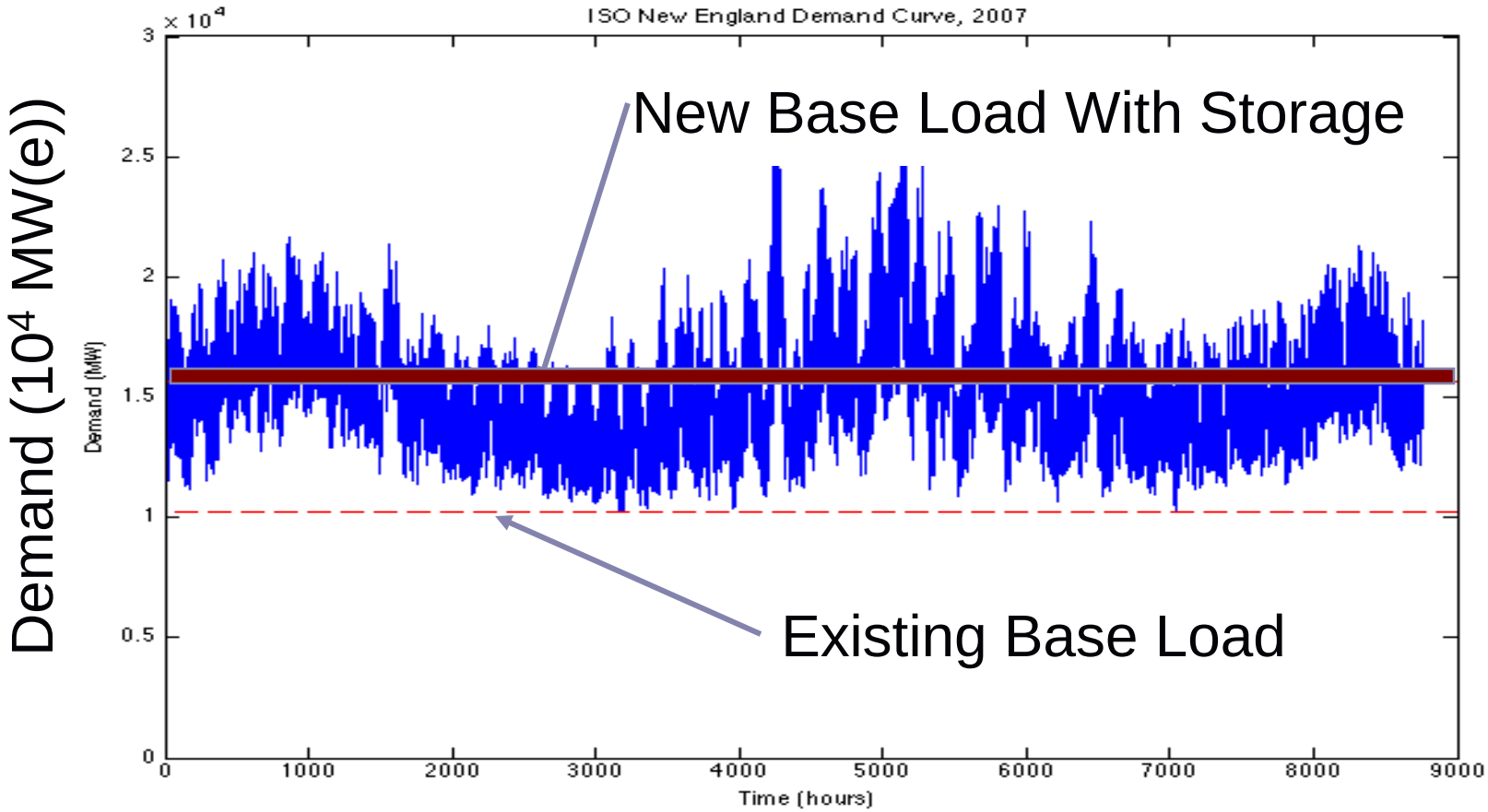

Time (hours since beginning of year)

California Demand and Production with All-Nuclear, All-Wind, or All-Solar Systems

KWh Produced/Year By Each Technology = KWh Consumed/Year

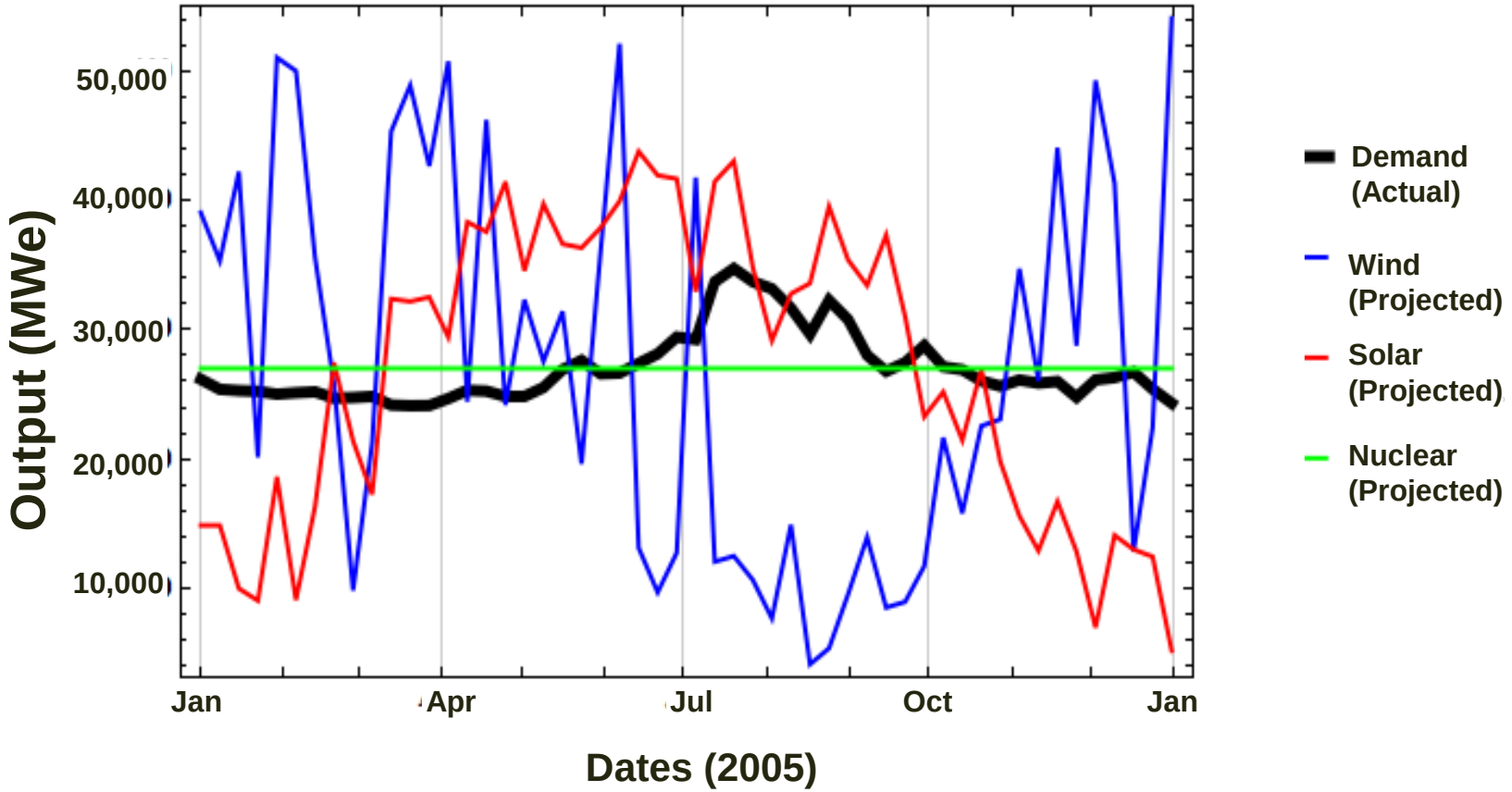

California Weekly Averaged 2005 Data Assuming All Electricity Produced By Nuclear, or Wind, or Solar Trough (With Limited Storage)

California Electricity Storage Requirements As Fraction of Total Electricity Produced

Assuming Perfect Storage—No Loses

Electricity Production	Hourly	Daily Constant Demand Each Day[3]	Yearly Constant Demand Each Week[4]
All-Nuclear[1]	0.07	0.04	0.04
All-Wind[2]	0.45	0.36	0.25
All-Solar[2]	0.50	0.21	0.17

[1]Steady-state nuclear; NREL wind and solar trough model using California wind and solar data; [3]Assume each day has constant demand so storage addresses demand variations between days; [4]Assume each week has constant demand so storage addresses demand variations between weeks

Variable Price of Electricity: Includes Negative Worth Electricity (Heat)

Low Prices When Low Demand, High-Prices When High Demand

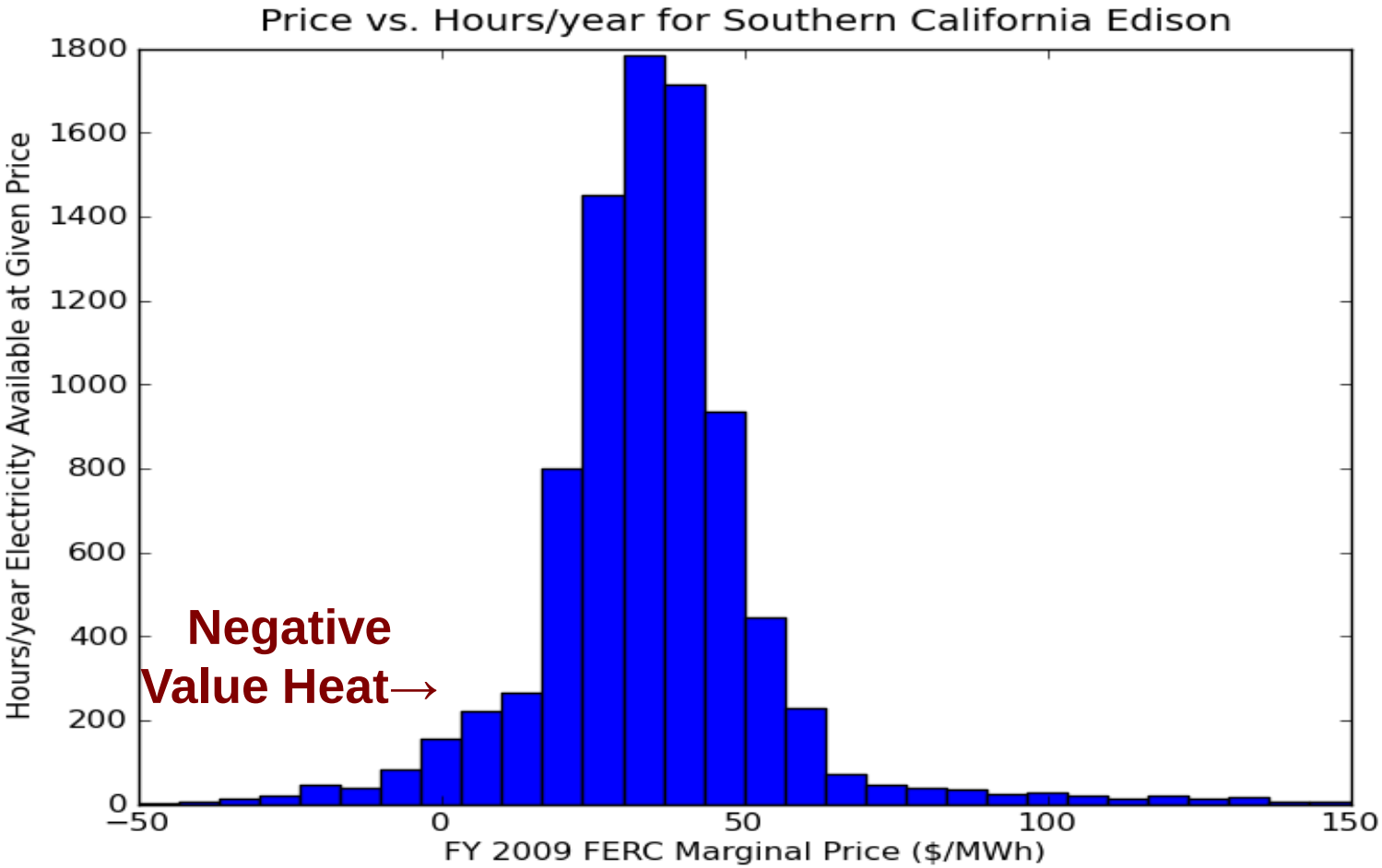

Some Electricity Is Very Expensive Because Equipment Is Used Very Few Hours/Year

Midwest ISO Generation Vs Generator Hours/year

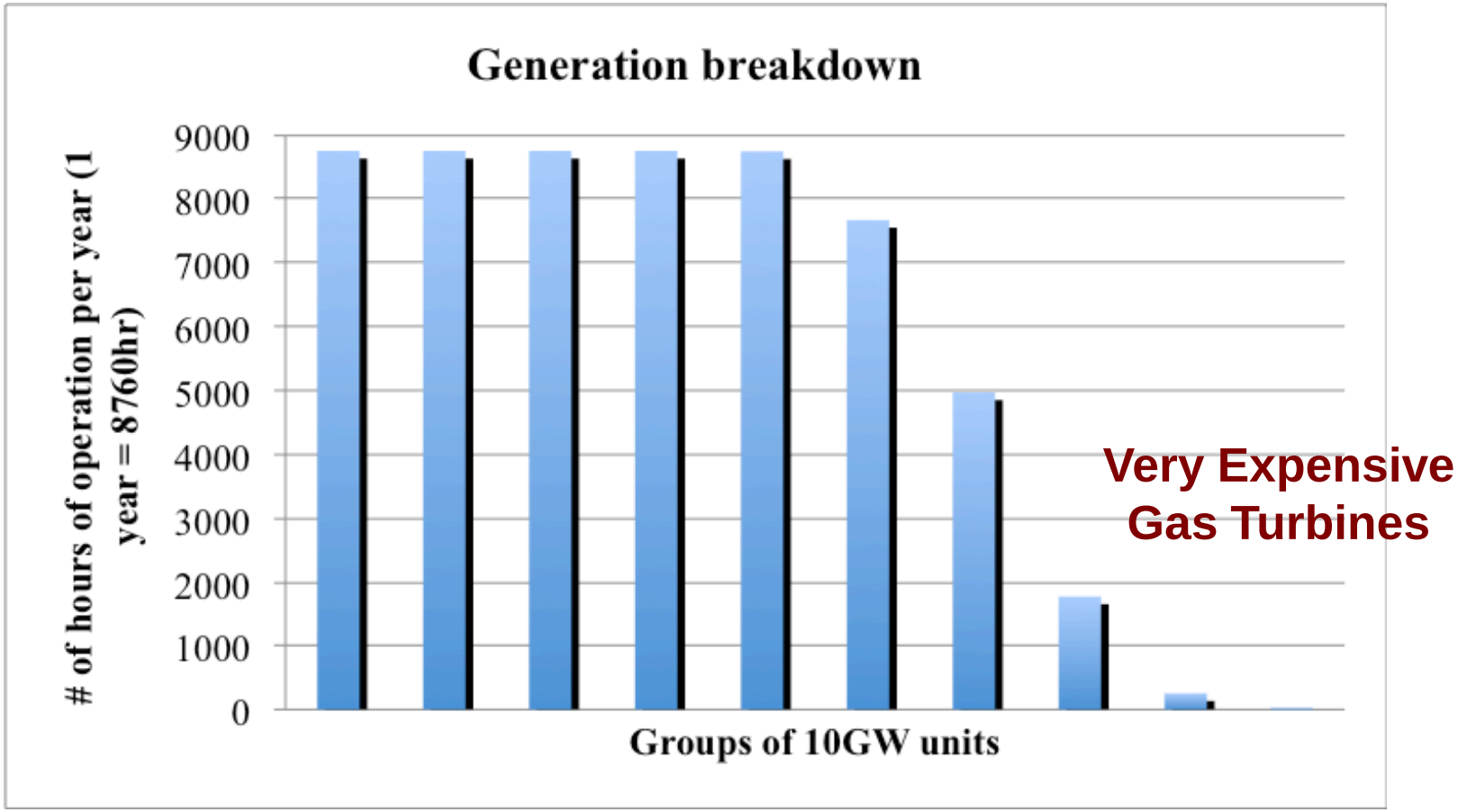

Nuclear Thermal-Energy Storage Characteristics and Constraints

Nuclear Thermal-Storage System Characteristics and Constraints

- Minimum size: Gigawatt-hours or larger
- Peak Temperatures
  - Light-Water Reactor (Today): ~275 C
  - High-Temperature Reactor (Future): ~800 C
- Large sites with security exclusion zones
  - Storage system mass not a constraint
  - Storage system volume unlikely to be a constraint
- Reactor safety considerations
  - Large quantities of stored energy in any viable storage system
  - Must consider mechanical and chemical hazards

Example Nuclear Thermal Storage Technologies

Not a Comprehensive Review

Store Steam in Accumulators

Hourly Storage, Fast Response, High Capacity

- Store steam when low demand
  - Steam accumulator storage options (steam and hot water)
    - Banks of oil pipe in insulated building
    - Underground cavern
  - Separate peaking steam turbine
- Technical characteristics
  - Fast response if hot spinning turbine
  - Off the shelf technology if use oil pipe accumulators
- Accumulator technology status
  - Last nuclear-system study 1973
  - Used in one solar-thermal system*
  - Potentially favorable economics

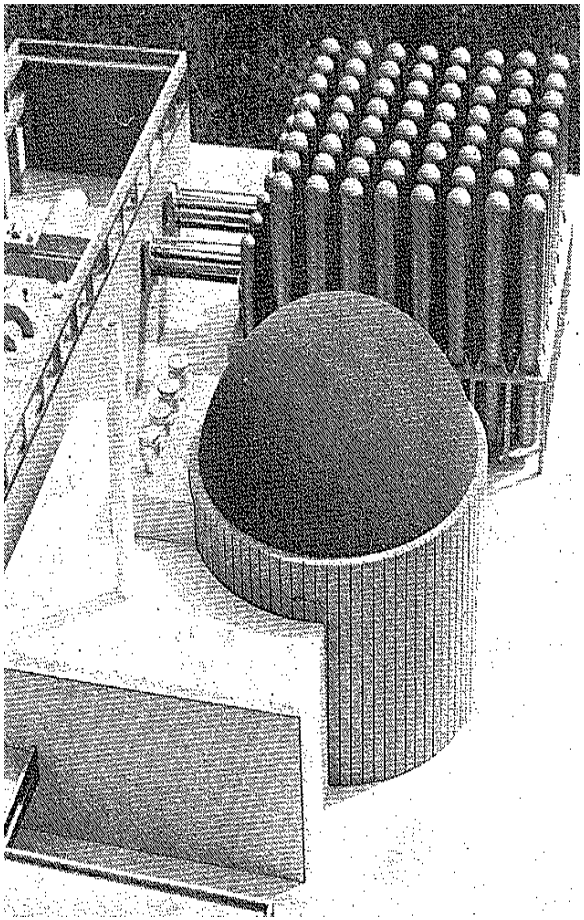

*The PS-10 solar thermal plant in Spain has steam accumulators for 30 to 60 minutes of peak power. PS-10 peak steam temperatures (285°C) are similar to a PWR; however, a large system would have different design characteristics.

Need: Updated Utility-Engineering Study?

Reactor **Main Turbines** **Peaking Turbines**

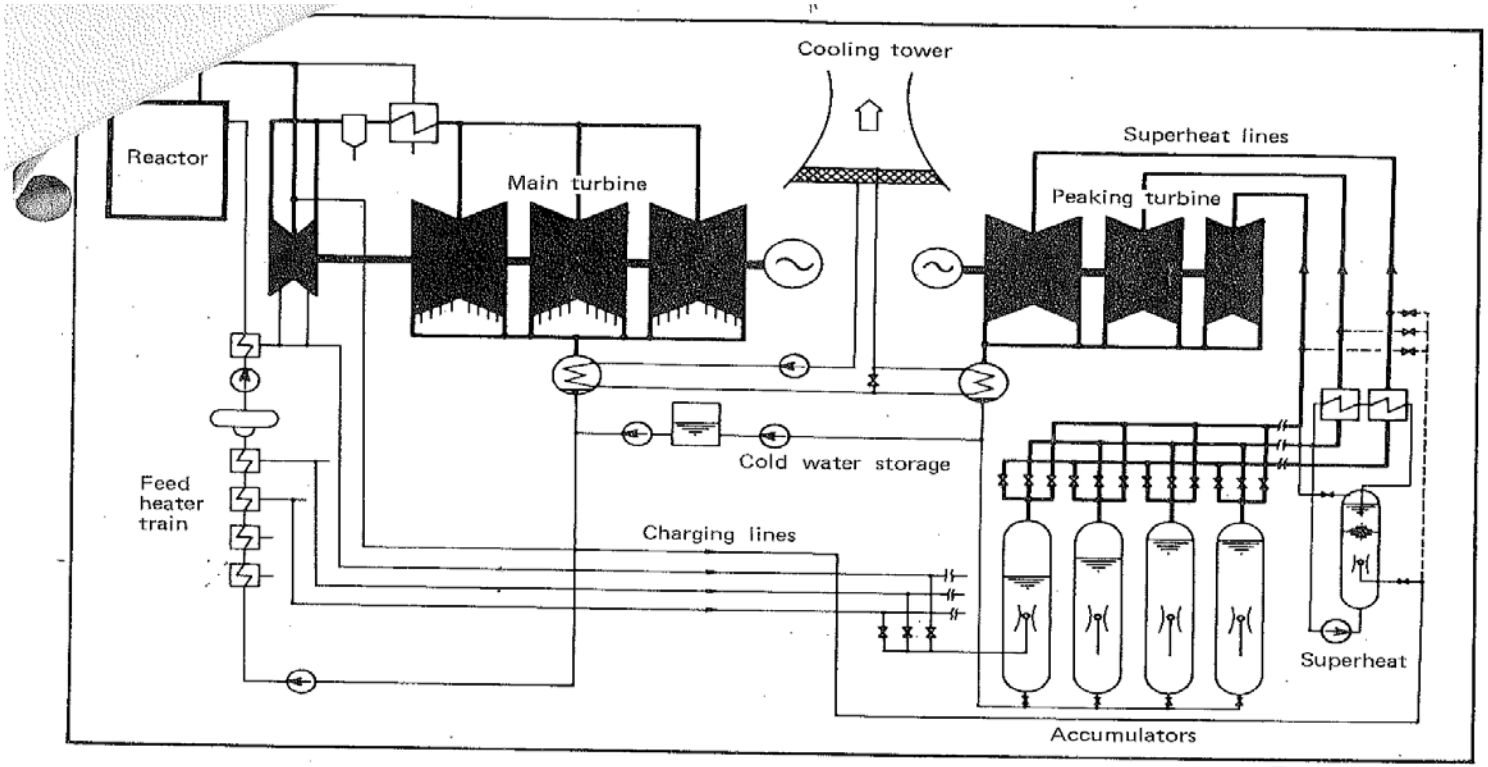

Accumulators

Improved Economics If Can Find Low-Cost Enhanced Heat-Capacity Materials Per Unit Volume to Reduce Accumulator Size

P. V. Gilli and G. Beckman, Steam Storage Adds Peaking Capacity to Nuclear Plants, *Energy International*, **10**, No. 8, pp 16-18, August 1973

High-Temperature Reactor Heat Storage

Hourly to Daily Storage: 500 to 1000°C

Liquid-Salt (Low Pressure) Thermal-Storage Technologies Applicable to Nuclear and Solar

MIT Concentrated Solar Power on Demand (CSPond)

J. Buongiorno, C. Forsberg, T. McKrell,
A. Mitsos, J.C. Nave, A. Slocum

Joint MIT Department of Mechanical Engineering and
MIT Department of Nuclear Science and Technology Project

Includes High-Temperature Storage Technology Applicable to HTRs; Liquid Salts are Leading Candidates for Heat Transport from Reactor to Industrial Customers

A. Slocum, J. Buongiorno, C. W. Forsberg, T. McKrell, A. Mitsos, J. Nave, D. Codd, A. Ghobeity, C. J. Noone, S. Passerini, F. Rojas,
B. "Concentrated Solar Power on Demand," (Submitted to Solar Energy)

CSPond Description

Figure Next Page

- Mirrors shine sunlight to receiver
- Receiver is a high-temperature liquid salt bath inside insulated structure with open window for focused light
  - Light volumetrically absorbed through several meters of liquid salt
  - Building minimizes heat losses by receiver
  - Enables salt temperatures to 900 C
- Small window minimizes heat losses but very high power density of sunlight through window
  - Power density would destroy conventional boiler-tube collector
  - Light absorbed volumetrically in several meters in salt
- Requires high-temperature (semi-transparent) salt—Similar salt requirements as for HTR heat transfer loop

Solar-Thermal Mirror Field and Collector

- Beam-down heliostat field
- Concentrated light through small window into insulated structure implies low heat loses
- Volumetric light absorption in liquid salt (High energy flux)

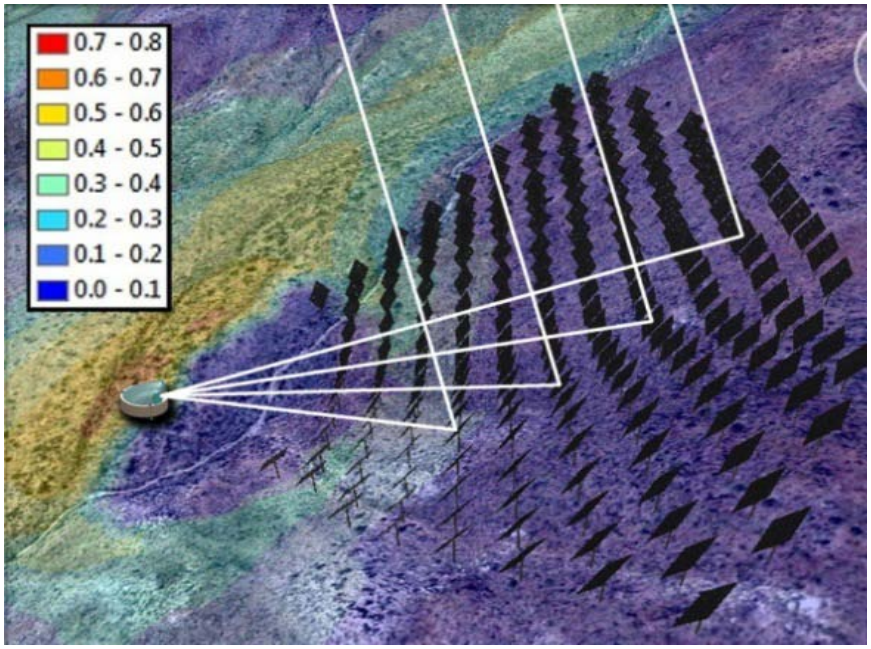

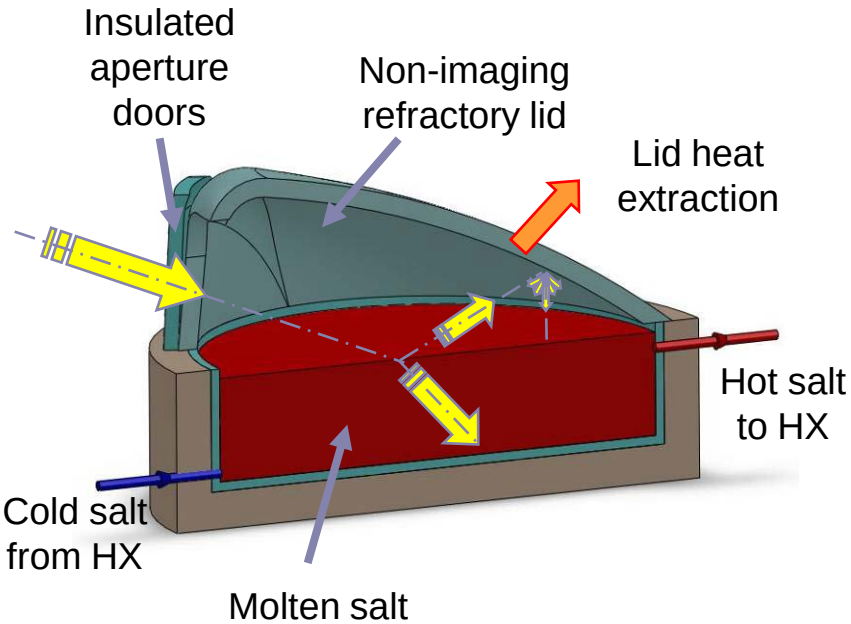

- High efficiency relative to other solar systems
- Liquid salt: Absorb light, storage media, and heat-transfer fluid

Family of High-Temperature Salt Thermal Storage Systems—All Unexplored

- CSPond: Deep heat-storage salt pond (Simple option)
  - Hot salt on top (Red)
  - Cold salt on bottom (Blue)
  - Insulated floating/cable-stay separator plate
- Part of a larger salt heat-storage family of options for HTRs
  - Lack of required physical property measurements
  - Many variants—most lacking key experiments to demonstrate feasibility

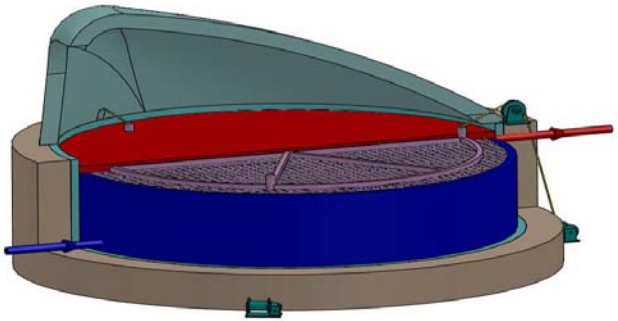

Morning

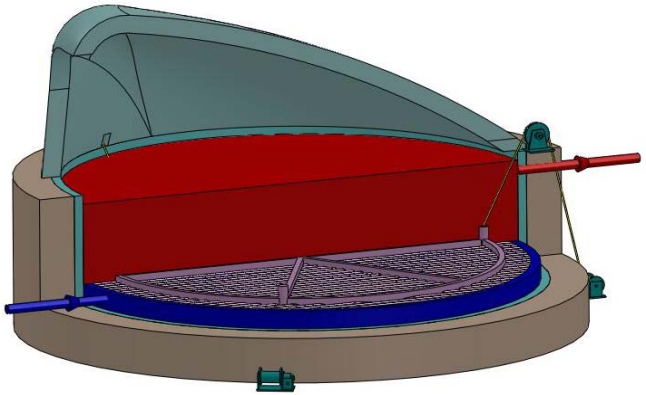

Evening

Nuclear-Geothermal System

Daily, Weekly, and Seasonal Storage

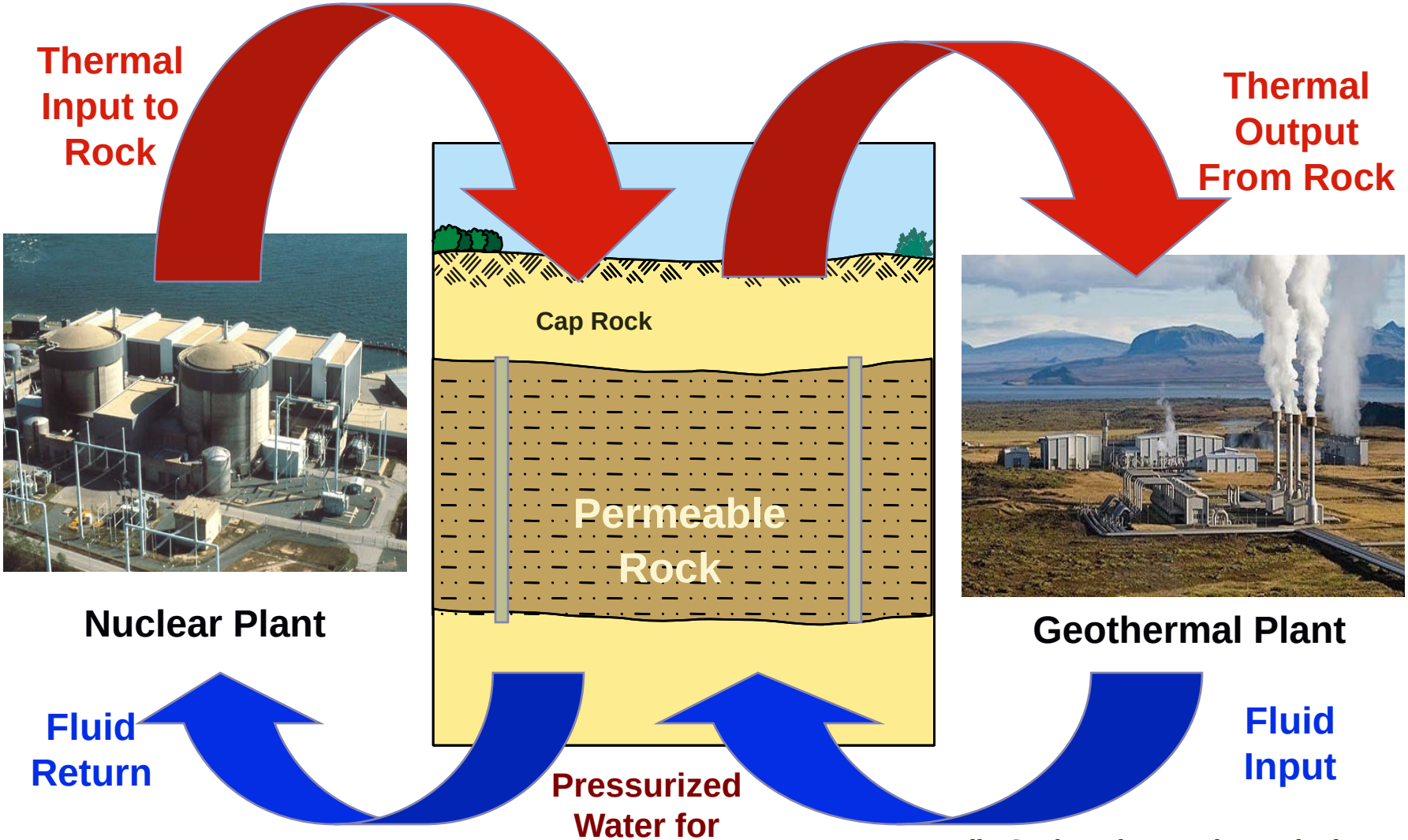

Nesjavellir Geothermal power plant; Iceland; 120MW(e); Wikimedia Commons (2010)

Nuclear-Geothermal Storage Is Based On Two Technologies

Recovery of Heavy Oil By Reservoir Heating

California and Canada

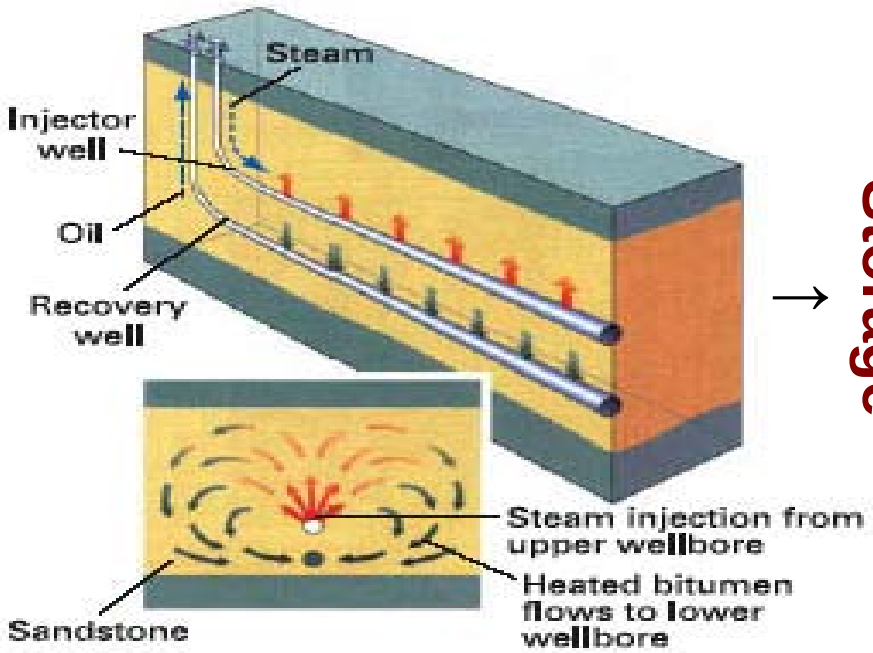

→ **Storage** →

Geothermal Power Plant Heat Extraction

Figure courtesy of Schlumberger; Nesjavellir Geothermal power plant, Iceland: 120MW(e); Wikimedia Commons (2010)

Nuclear Geothermal Heat Storage

- Rapid progress driven by heavy-oil and geothermal technical advances
- Many ways to create permeable storage zone
  - Hydrofracture (Oil industry technology)
  - Cave block mining—underground rubble pile (Copper mining)
  - Conversion of heavy-oil reservoir to heat storage*
- Technical characteristics
  - Large scale
  - Dependent upon the local geology
  - May be the only economic seasonal-scale thermal storage technology
- Status: Early technical development

*C. W. Forsberg, R. Krentz-Wee, Y. H. Lee, and I. O. Oloyede, Nuclear Energy for Simultaneous Low-Carbon Heavy-Oil Recovery and Gigawatt-Year Heat Storage for Peak Electricity Production, MIT-NES-TR-011, Massachusetts Institute of Technology (December 2010).

Nuclear Thermal-Energy Storage Conclusions

- Massive need for energy storage on three time scales
  - Hourly: Including rapid response
  - Daily: 3-day weather pattern and workweek-weekend
  - Seasonal
- Nuclear thermal-energy storage options exist for each market—but significant challenges
  - Nuclear economics demands full-load output by reactor
  - Must consider safety—storing large quantities of energy
  - Limited work on storage technologies—many technical challenges
- Options for joint RD&D
  - Many thermal storage systems applicable to solar and nuclear
  - Potential for international cooperation where large incentives for storage: France, Germany, Sweden, Spain, Japan, South Korea, Russia, and China

Questions

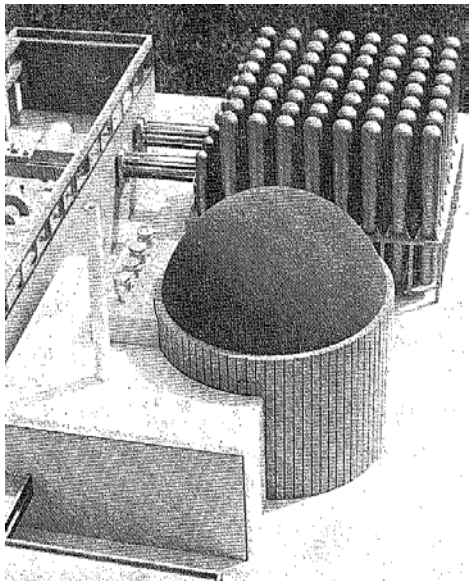

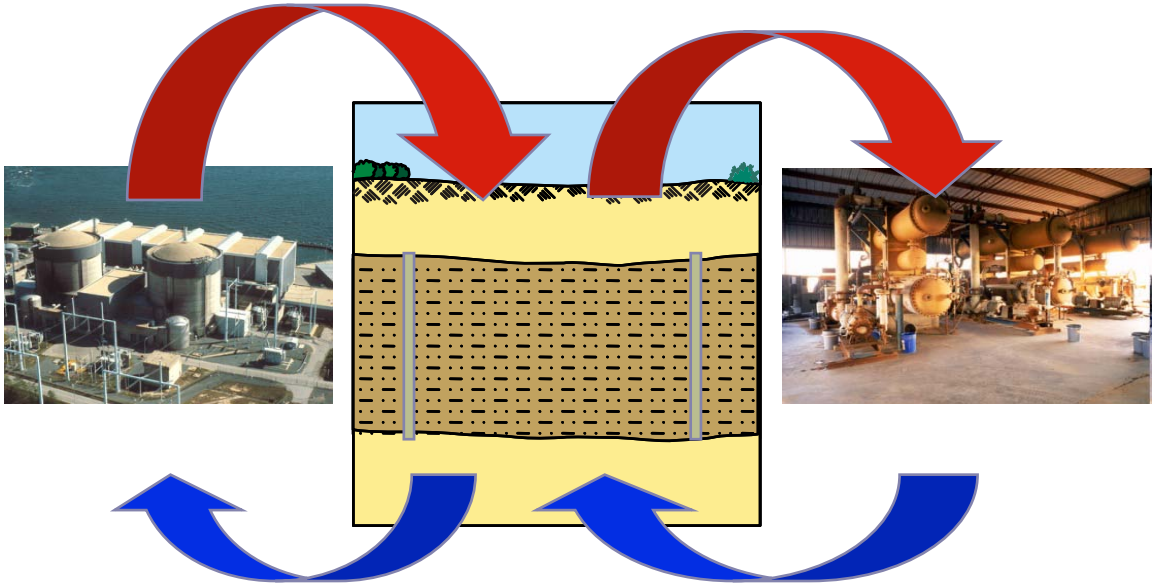

Additional Information

Biography: Charles Forsberg

Dr. Charles Forsberg is the Executive Director of the Massachusetts Institute of Technology Nuclear Fuel Cycle Study. Before joining MIT, he was a Corporate Fellow at Oak Ridge National Laboratory. He is a Fellow of the American Nuclear Society, a Fellow of the American Association for the Advancement of Science, and recipient of the 2005 Robert E. Wilson Award from the American Institute of Chemical Engineers for outstanding chemical engineering contributions to nuclear energy, including his work in hydrogen production and nuclear-renewable energy futures. He received the American Nuclear Society special award for innovative nuclear reactor design. Dr. Forsberg earned his bachelor's degree in chemical engineering from the University of Minnesota and his doctorate in Nuclear Engineering from MIT. He has been awarded 11 patents and has published over 200 papers.

References

1. C. W. Forsberg, "Sustainability by Combining Nuclear, Fossil, and Renewable Energy Sources," *Progress in Nuclear Energy*, **51**, 192-200 (2009)
2. C. W. Forsberg, "Use of High-Temperature Heat in Refineries, Underground Refining, and Bio-Refineries for Liquid-Fuels Production," HTR2008-58226, *4th International Topical Meeting on High-Temperature Reactor Technology, American Society of Mechanical Engineers; September 28-October 1, 2008;Washington D.C.*
3. C. W. Forsberg, "Economics of Meeting Peak Electricity Demand Using Hydrogen and Oxygen from Base-Load Nuclear or Off-Peak Electricity," *Nuclear Technology*, **166**, 18-26 April 2009.
4. I. Oloyede and C. Forsberg, "Implications of Gigawatt-Year Electricity Storage Systems on Future Baseload Nuclear Electricity Demand", Paper 10117, *Proc. International Congress on Advanced Nuclear Power Plants, San Diego*, 15-17 June 2010.
5. Y. H. Lee, C. Forsberg, M. Driscoll, and B. Sapiie, "Options for Nuclear-Geothermal Gigawatt-Year Peak Electricity Storage Systems," Paper 10212, *Proc. International Congress on Advanced Nuclear Power Plants, San Diego*, 15-17 June 2010.
6. G. Haratyk and C. Forsberg, "Integrating Nuclear and Renewables for Hydrogen and Electricity Production", Paper 1082, *Second International Meeting on the Safety and Technology of Nuclear Hydrogen Production, Control, and Management, Embedded American Nuclear Society Topical, San Diego*, 15-17 June 2010.
7. C. Forsberg, "Alternative Nuclear Energy Futures: Peak Electricity, Liquid Fuels, and Hydrogen", Paper 10076, *Second International Meeting on the Safety and Technology of Nuclear Hydrogen Production, Control, and Management, Embedded American Nuclear Society Topical, San Diego*, 15-17 June 2010.
8. I. Oloyede, C. W. Forsberg, M. J. Driscoll, "Gigawatt-Year Electricity Storage Requirements for Nuclear and Renewable Power Production," American Nuclear Society Winter Meeting, Las Vegas, Nevada (Nov 2010).
9. C. W. Forsberg, "An Air-Brayton Nuclear Hydrogen Combined-Cycle Peak- and Base-Load Electric Plant," CD-ROM, IMECE2007-43907, *2007 ASME International Mechanical Engineering Congress and Exposition, Seattle, Washington, November 11-15, 2007*, American Society of Mechanical Engineers, 2007 .
10. C. W. Forsberg and James C. Conklin, *Hydrogen-or-Fossil-Combustion Nuclear Combined-Cycle Systems for Base- and Peak-Load Electricity Production*, ORNL-6980, Oak Ridge National Laboratory, Oak Ridge, Tennessee, September 2007.
11. J. C. Conklin and C. W. Forsberg, "Base-Load and Peak Electricity from a Combined Nuclear Heat and Fossil Combined-Cycle Power Plant," *Proc. Global 2007: Advanced Nuclear Fuel Cycles and Systems, Boise, Idaho, September 9-13, 2007*, American Nuclear Society, La Grange Park, Illinois.
12. A. Slocum, J. Buongiorno, C. W. Forsberg, T. McKrell, A. Mitsos, J. Nave, D. Codd, A. Ghobeity, C. J. Noone, S. Passerini, F. Rojas, "Concentrated Solar Power on Demand," (Submitted to Solar Energy).
13. C. W. Forsberg, R. Krentz-Wee, Y. H. Lee, and I. O. Oloyede, Nuclear Energy for Simultaneous Low-Carbon Heavy-Oil Recovery and Gigawatt-Year Heat Storage for Peak Electricity Production, MIT-NES-TR-011, Massachusetts Institute of Technology (December 2010).

ABSTRACT

Thermal Energy Storage Systems for Peak Electricity from Nuclear Energy

There are large incentives to operate nuclear and renewable energy sources at full output because these technologies have high capital costs and low operating costs. However, their output does not match electricity demand. Full utilization of these energy sources would be aided by storage technologies that store energy at times of low electricity demand and provide that energy for electricity or industrial use at time of high energy demand.

Nuclear and solar thermal systems produce heat; thus, thermal energy storage is a preferred form of energy storage because it avoids the inefficiencies in conversion from one storage media to another. The expectation is that many thermal storage technologies would be applicable to both energy technologies.

There are three storage markets with different requirements: hourly storage (including rapid response), weekly storage to address the 3-day weather and the weekday-weekend cycles in electricity demand, and seasonal energy storage to address the fall, winter, spring, and summer variations in energy demand. The longer term storage systems may be able to address hourly storage requirements—but not via versa.

There was significant work on thermal storage systems in the 1970s. Improved technologies may make some of these storage technologies viable today. Most of the work was associated with solar systems with a limited amount of work on storage systems for nuclear power plants. Storage systems associated with nuclear plants have somewhat different requirements: mass and volume are not usually a constraint, safety must be considered because of the very large quantities of energy being stored, and the scale of operations will be much larger.

Acknowledgement: We would like to thank Idaho National Laboratory for their support of R&D at MIT on nuclear geothermal systems.

Electricity Demand Varies By the Day, Week, and Season

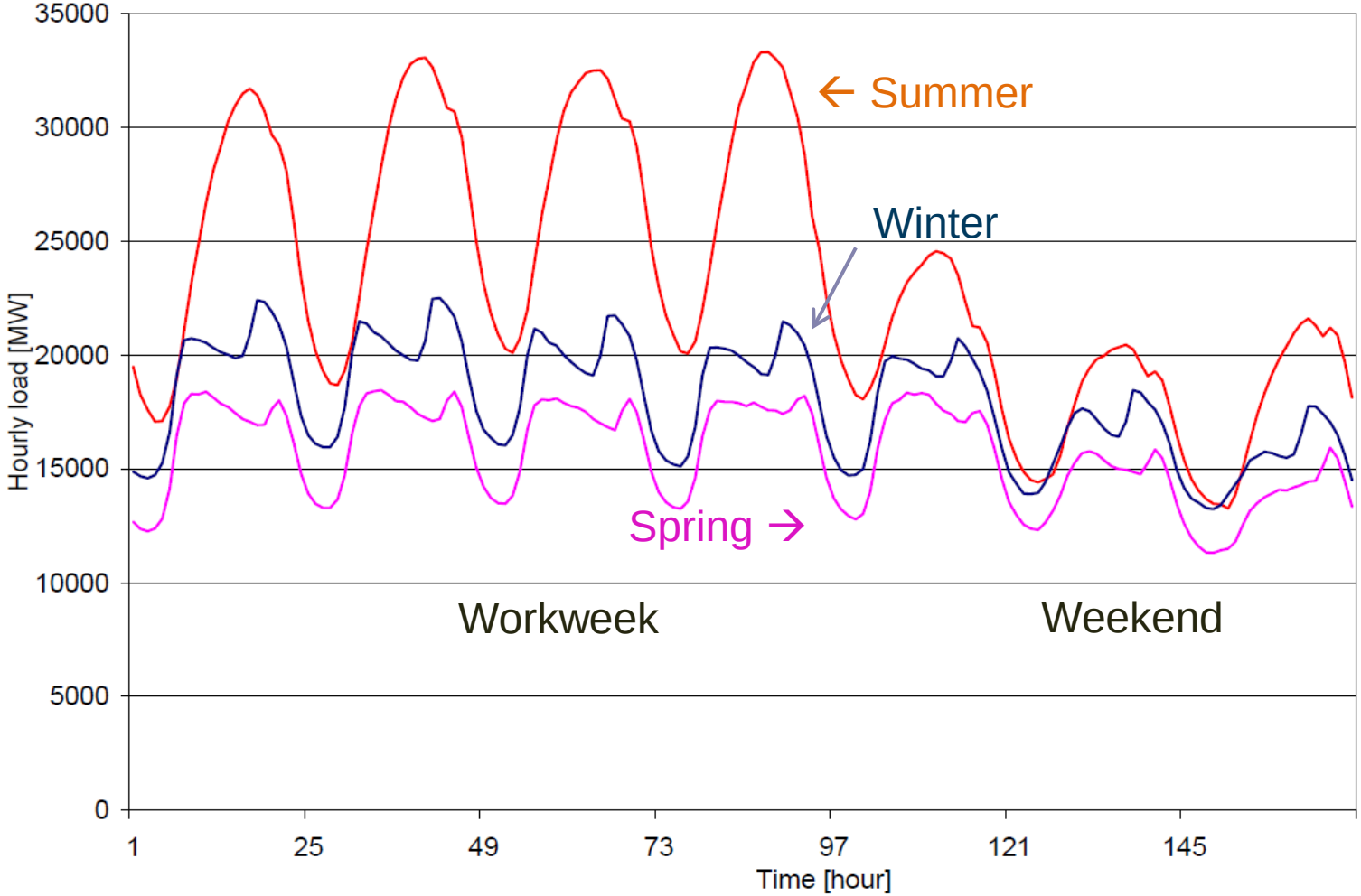

Hourly load forecasts for 3 different weeks in Illinois, USA

Storage Technologies & Capabilities

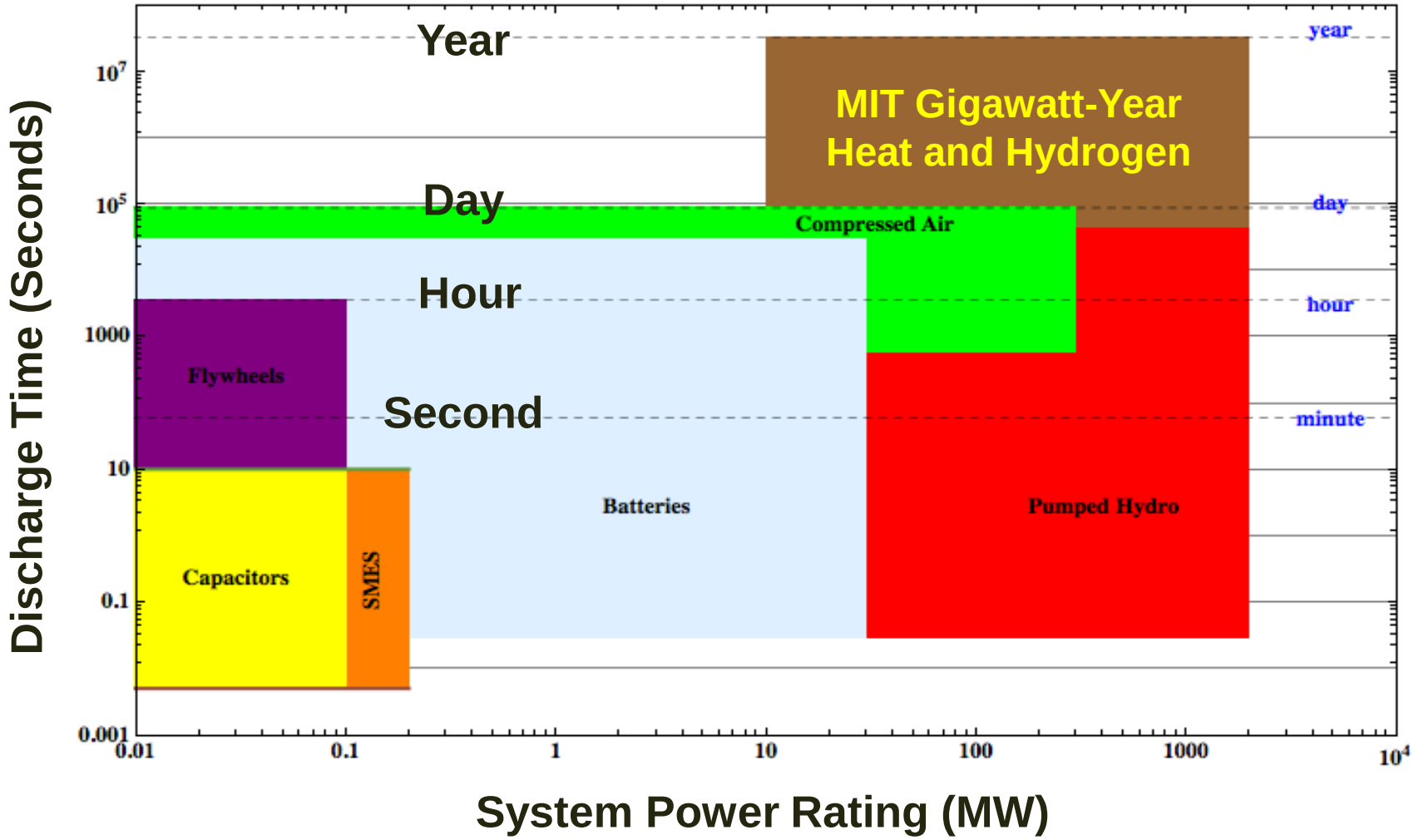

Implications of Renewables To The Energy Storage Challenge

- Characteristics
  - Seasonal mismatch between demand and production
  - Rapid variation in output
    - Some utilities operate gas turbines at no-load to respond to loss of wind output
    - Significant fuel bill
- Storage implications
  - Need rapid response for fast wind output changes
  - Need seasonal storage

Fossil Fuel Electricity Is Used to Match Electricity Supply with Demand

- Fossil fuels are <u>inexpensive to store</u> (coal piles, oil tanks, etc.)
- Systems to convert fossil fuels to heat or electricity have <u>low capital costs</u>

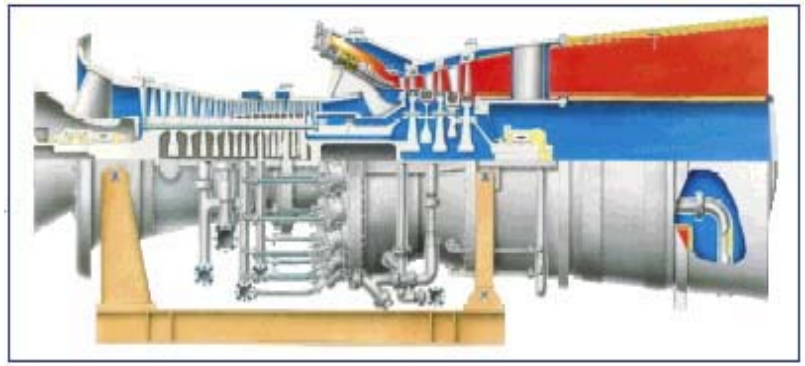

- Only two options today for peak electricity
  - Fossil fuel (Usually natural gas)
  - Hydroelectricity (Available in only some locations)
- **What replaces peak electricity from fossil fuels if fossil fuel use is limited or expensive?**

Nuclear-Geothermal Heat Storage Must Be Large to Avoid Excessive Heat Losses

Intrinsic Gigawatt-Year Storage System

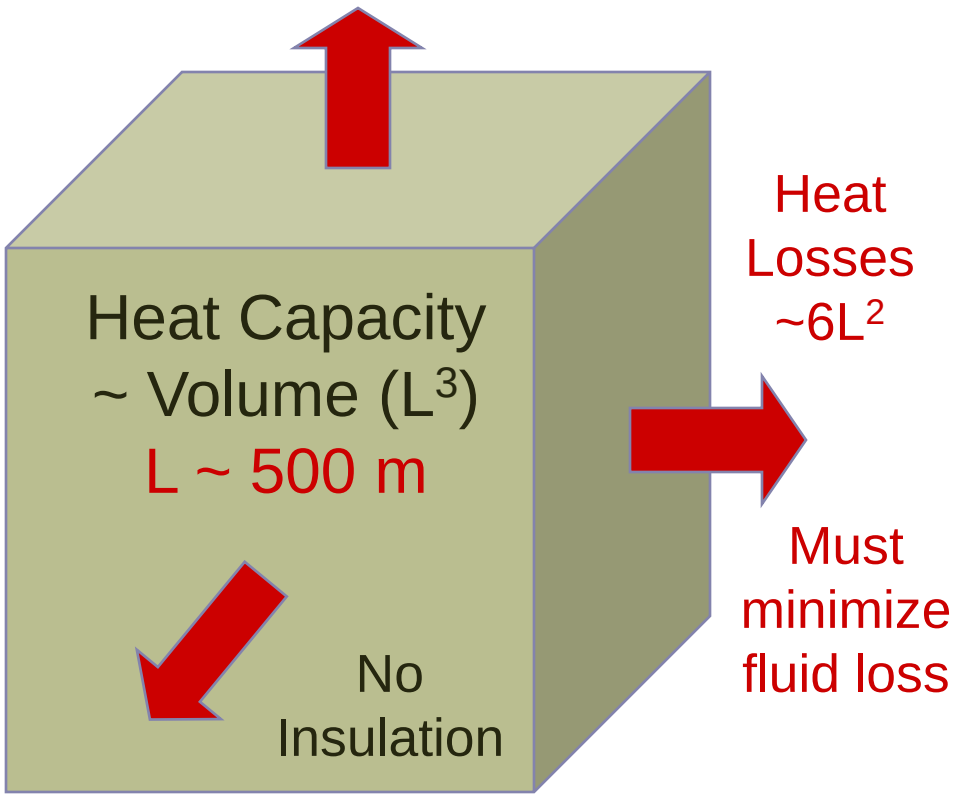

- Can not insulate rock
- Heat loses proportional to surface area
- Heat capacity proportional to volume
- Larger storage has smaller fractional heat loses

Fractional Heat Loss (6 Month Cycle) Versus Heat Storage Capacity

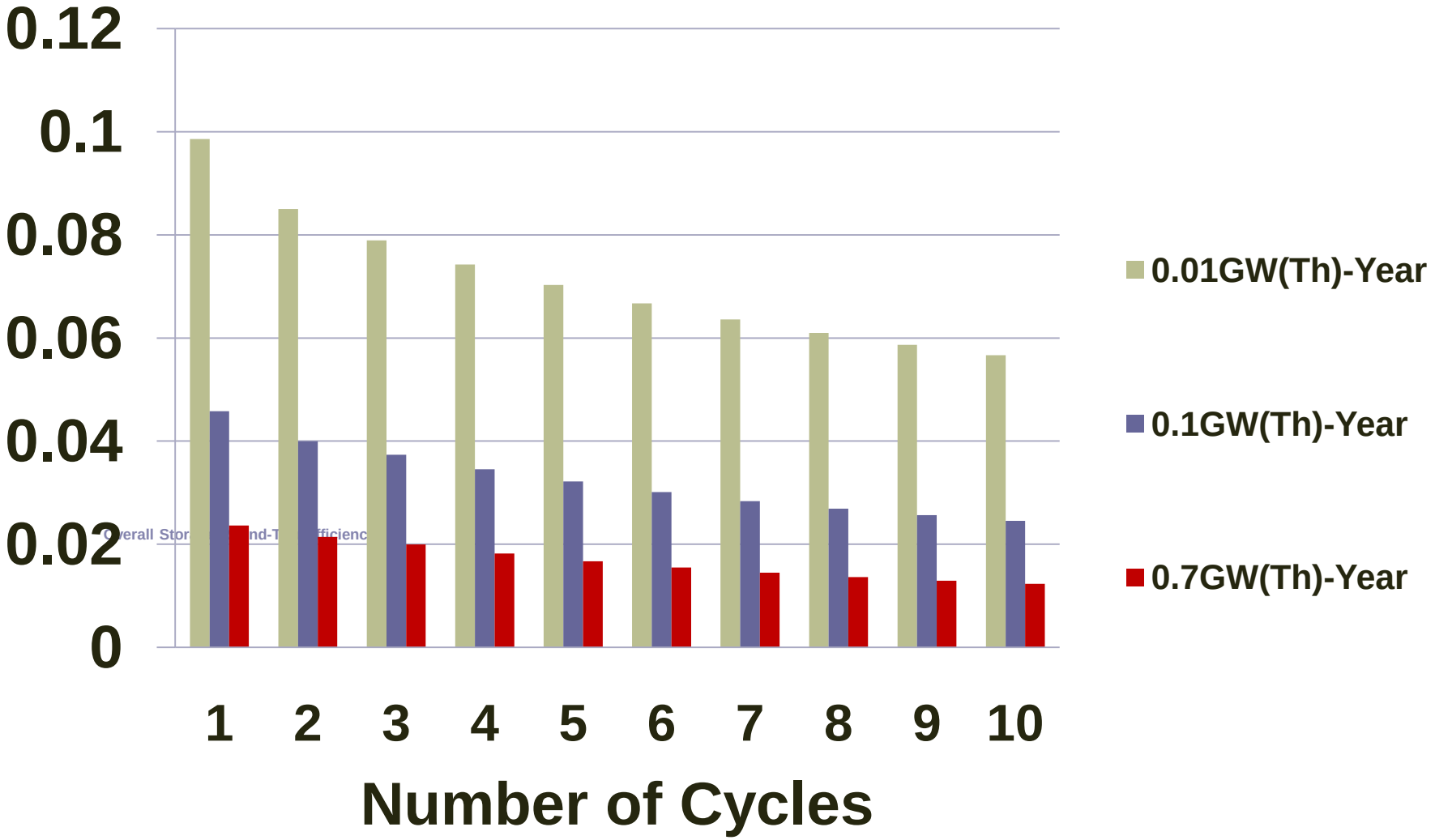

Gigawatt-year Storage Options

The Required Scale in a Low-Carbon World

Heat

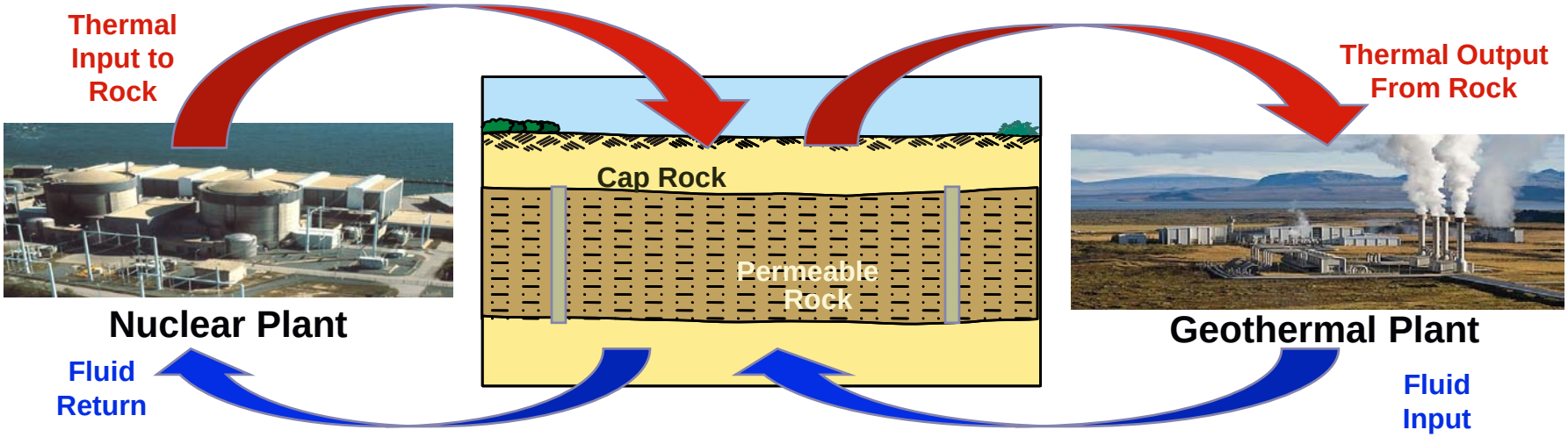

Hydrogen

Electricity → Hydrogen → Storage → Electricity

Chemical Heat Storage

- Store heat in reversible chemical reactions
- Example at 275 C (Match LWR heat output)
  - $MgCl_2 \bullet 2NH_3 \rightarrow MgCl_2 \bullet NH_3 + NH_3$
  - $CaCl_2 \bullet 4NH_3 + 4NH_3 \rightarrow CaCl_2 \bullet 8NH_3$
- Technical characteristics
  - Chemicals stored at low temperatures
    - No heat storage loses versus time
    - Candidate for longer term (weekly, etc) storage
  - Large surface area for heat transfer: Slow response
- Status
  - Major studies in the 1970s—emphasis on applications for solar thermal systems

G. Ervin, “Solar Heat Storage Using Chemical Reactors,” J. of Solid State Chemistry, **22**, 51-61. (1977)

Nuclear Combustion Combined-Cycle (NCCC) Plant

The Other Class of Nuclear Peak-Power Systems

Low Natural Gas or Hydrogen Consumption
Variable Electricity Output with Base-Load Nuclear

C. W. Forsberg, "An Air-Brayton Nuclear Hydrogen Combined-Cycle Peak- and Base-Load Electric Plant," CD-ROM, IMECE2007-43907, *2007 ASME International Mechanical Engineering Congress and Exposition, Seattle, Washington, November 11-15, 2007,* American Society of Mechanical Engineers, 2007; C. W. Forsberg and James C. Conklin, *Hydrogen-or-Fossil-Combustion Nuclear Combined-Cycle Systems for Base- and Peak-Load Electricity Production,* ORNL-6980, Oak Ridge National Laboratory, Oak Ridge, Tennessee, September 2007; J. C. Conklin and C. W. Forsberg, "Base-Load and Peak Electricity from a Combined Nuclear Heat and Fossil Combined-Cycle Power Plant," *Proc. Global 2007: Advanced Nuclear Fuel Cycles and Systems, Boise, Idaho, September 9-13, 2007,* American Nuclear Society, La Grange Park, Illinois.

The NCCC Plant is Similar to a Natural-Gas Combined-Cycle Plant

Gas Turbine Cycle

Steam Turbine Cycle

Two Heat Sources

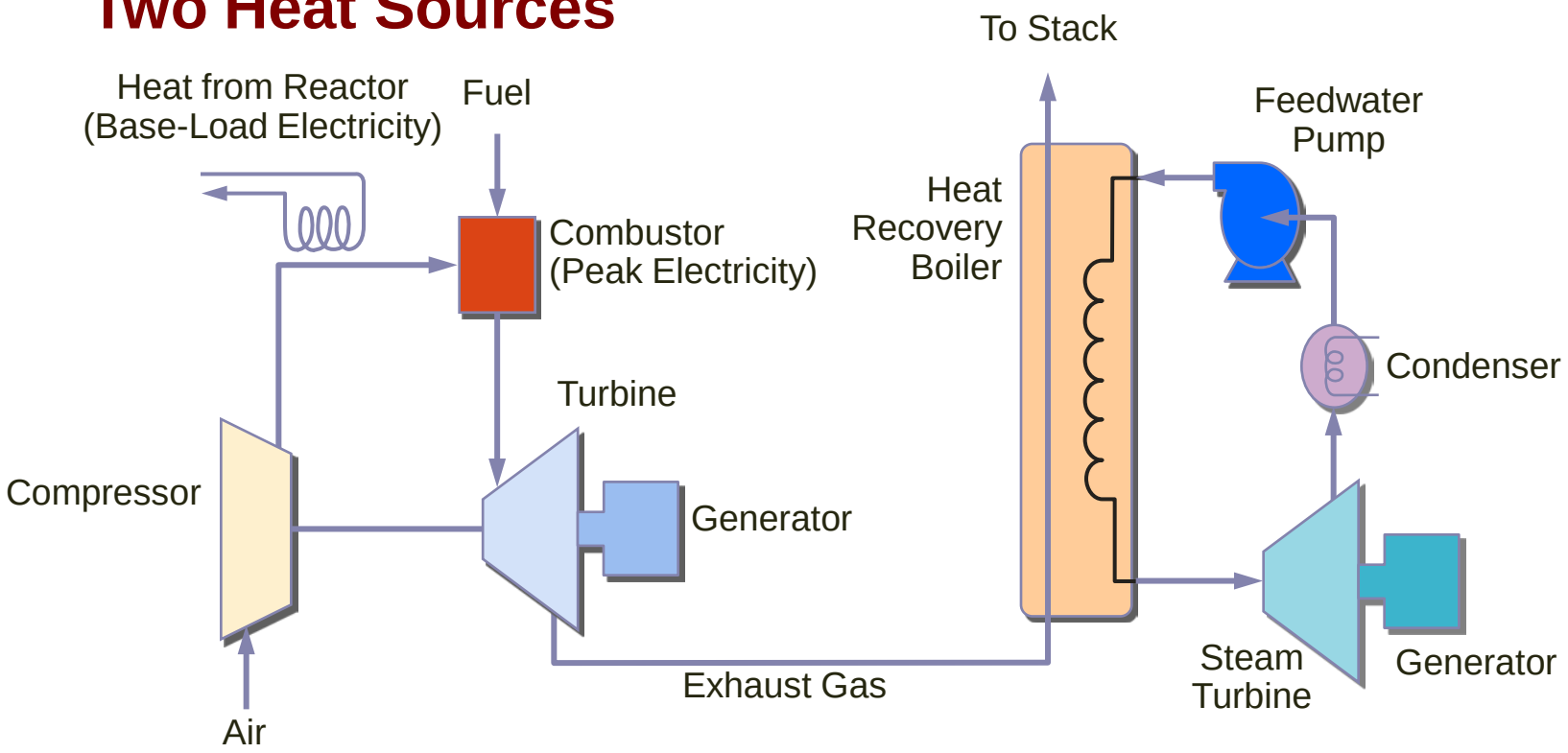

Nuclear Heat Only NCCC Electricity

- Compress air
- Heat air
  - High-temperature salt
  - 700 to 900 C
- No fuel to combustor
- Electricity from
  - Gas Turbine
  - Steam Turbine

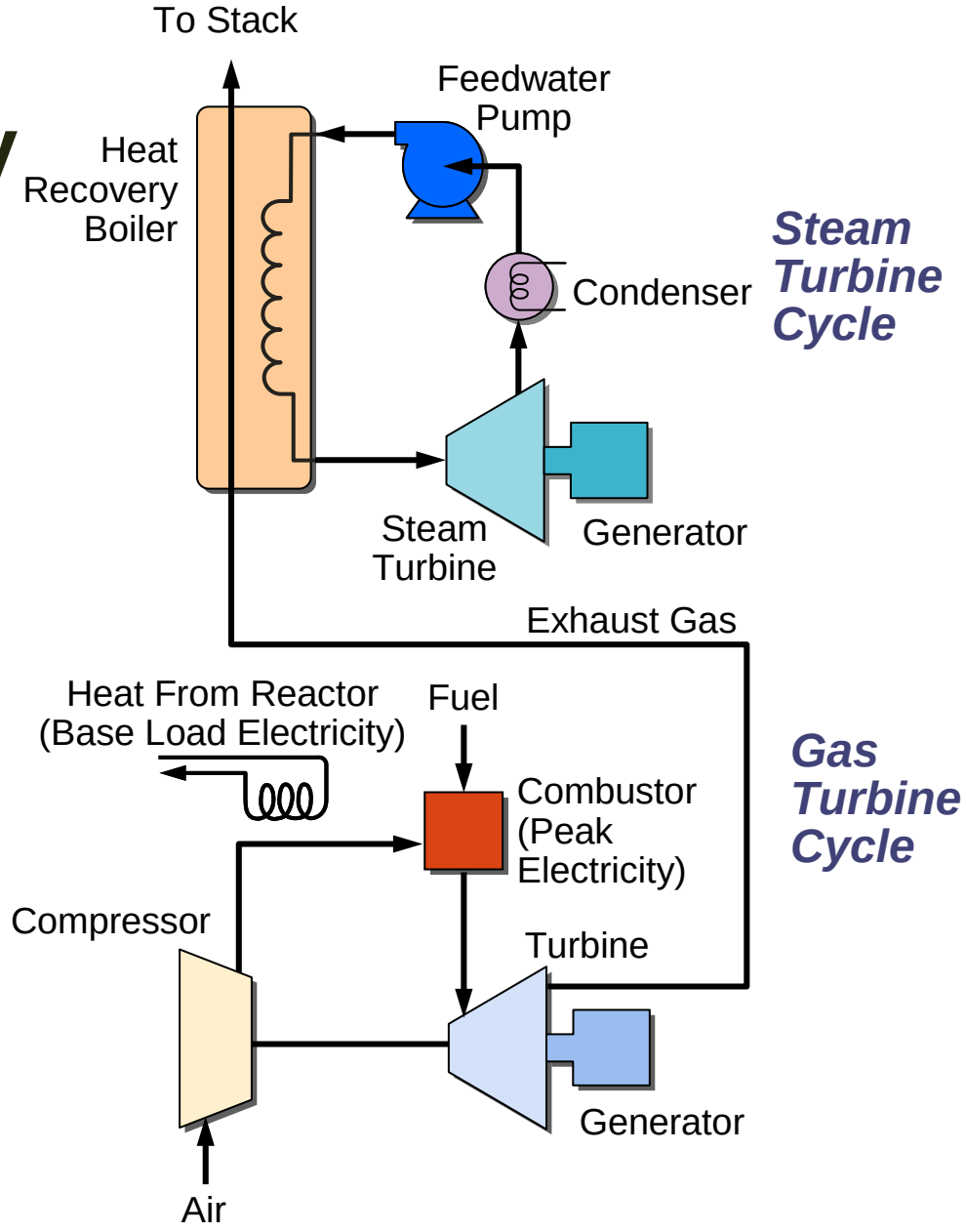

Peak-Load NCCC Electricity

- Compress air
- Heat air
  - Reactor heat air
  - 700 to 900 C
- Fuel to combustor
  - Temperature to 1300 C
- Low fuel consumption per added kWh generated because nuclear preheat and compression of air

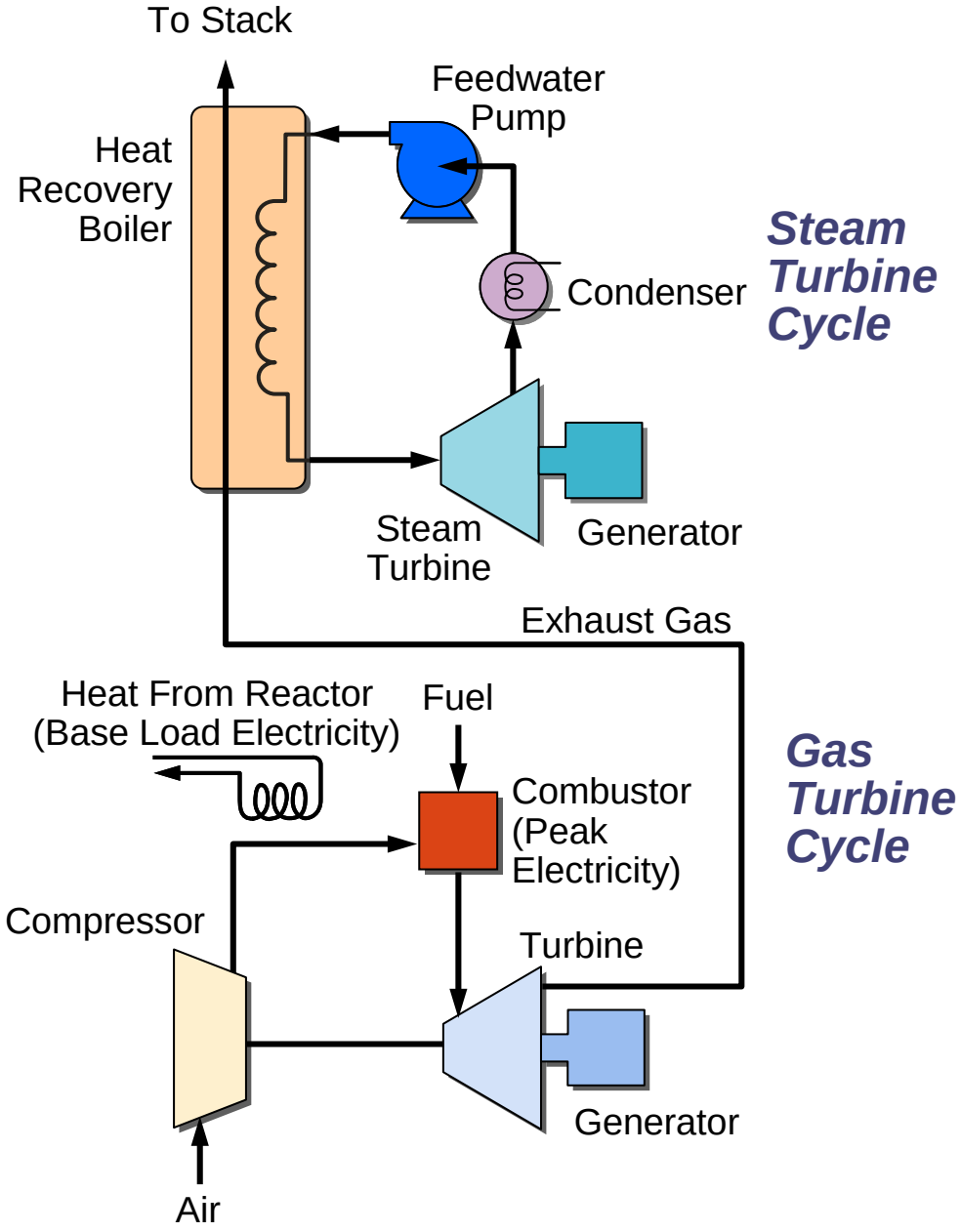

Incentives for the NCCC To Operate Above Fuel Auto-Ignition Temperatures

- Fuels spontaneously combust
  - Jet Fuel: 240–260°C
  - Natural gas: 630°C
  - Hydrogen: 570°C
- Implications
  - No flame stability issues
  - Can operate with any air-fuel ratio and thus infinite variable power output

Fast Response Compared to a Natural-Gas-Fired Turbine

- Characteristics
  - Air heated above the auto-ignition temperature so any air-fuel ratio is combustible
  - Compressor operates at constant speed and mass flow—powered by reactor heat. No added compressor load with increased electricity production
- Response speed limited by:
  - Valve opening speed
  - Flight time: Injector to gas turbine
  - Theoretical response in milliseconds

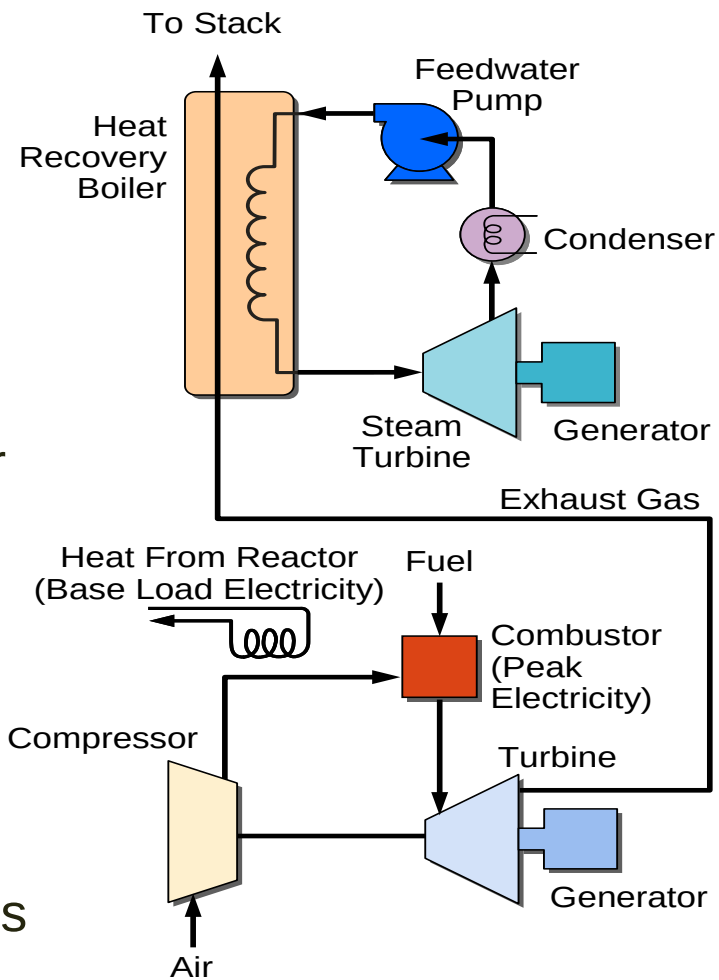

NCCC Features

- *Very low natural gas or hydrogen consumption per kWh because of nuclear heating and compression of air*
- Rapid response speeds
- Built on existing gas-turbine technology
- Dependent upon commercial deployment of high-temperature reactors
- New concept—limited work